Edizione 2010
Rev. A

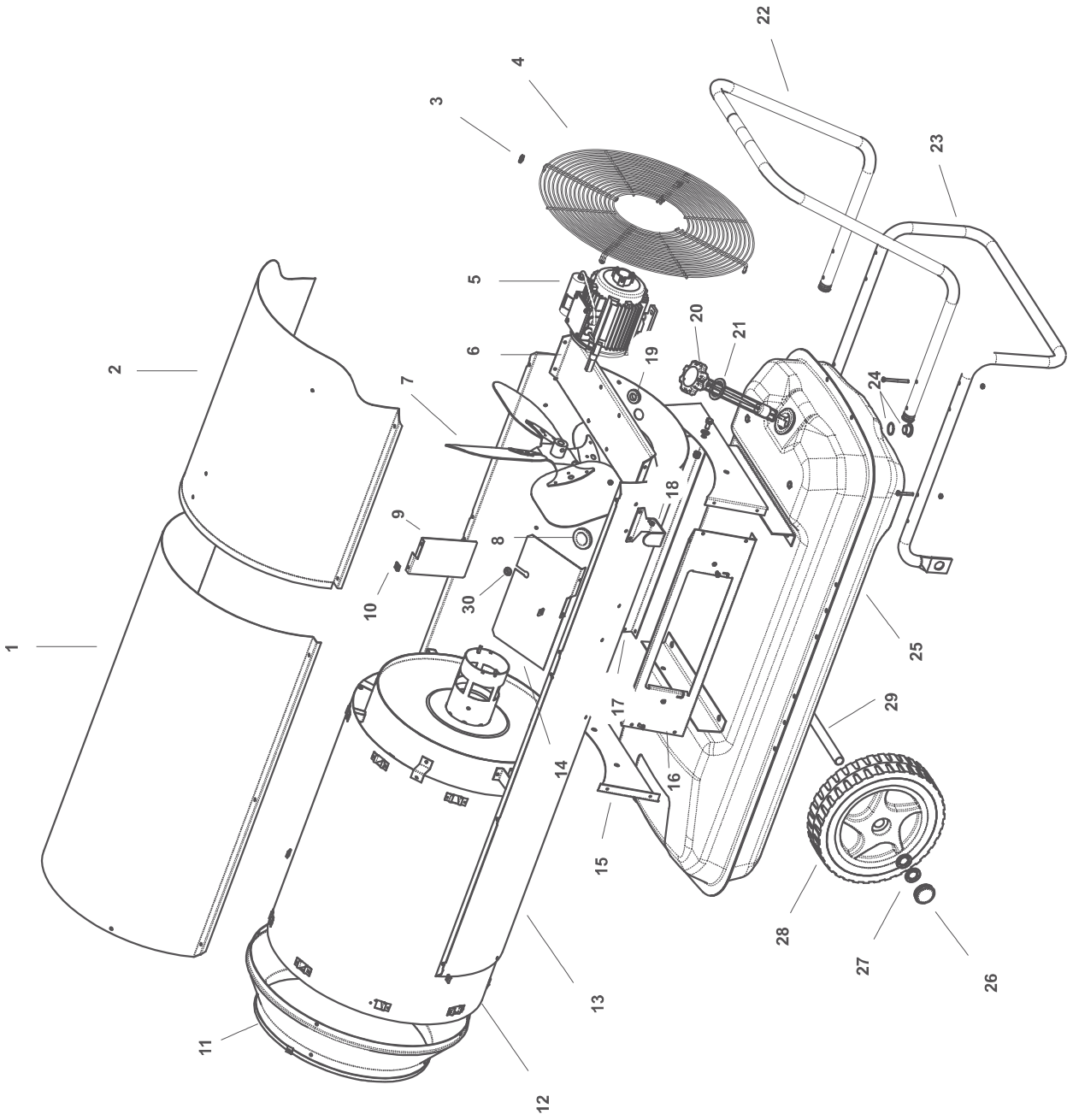

Edizione 2010
Rev. A

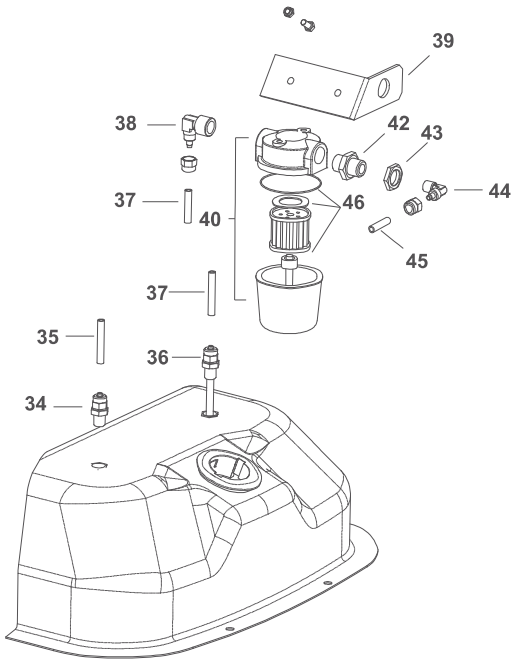


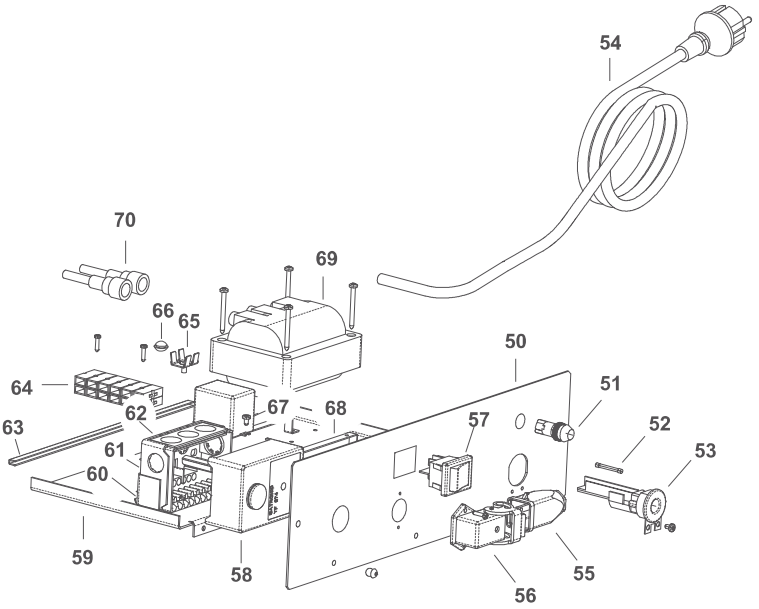


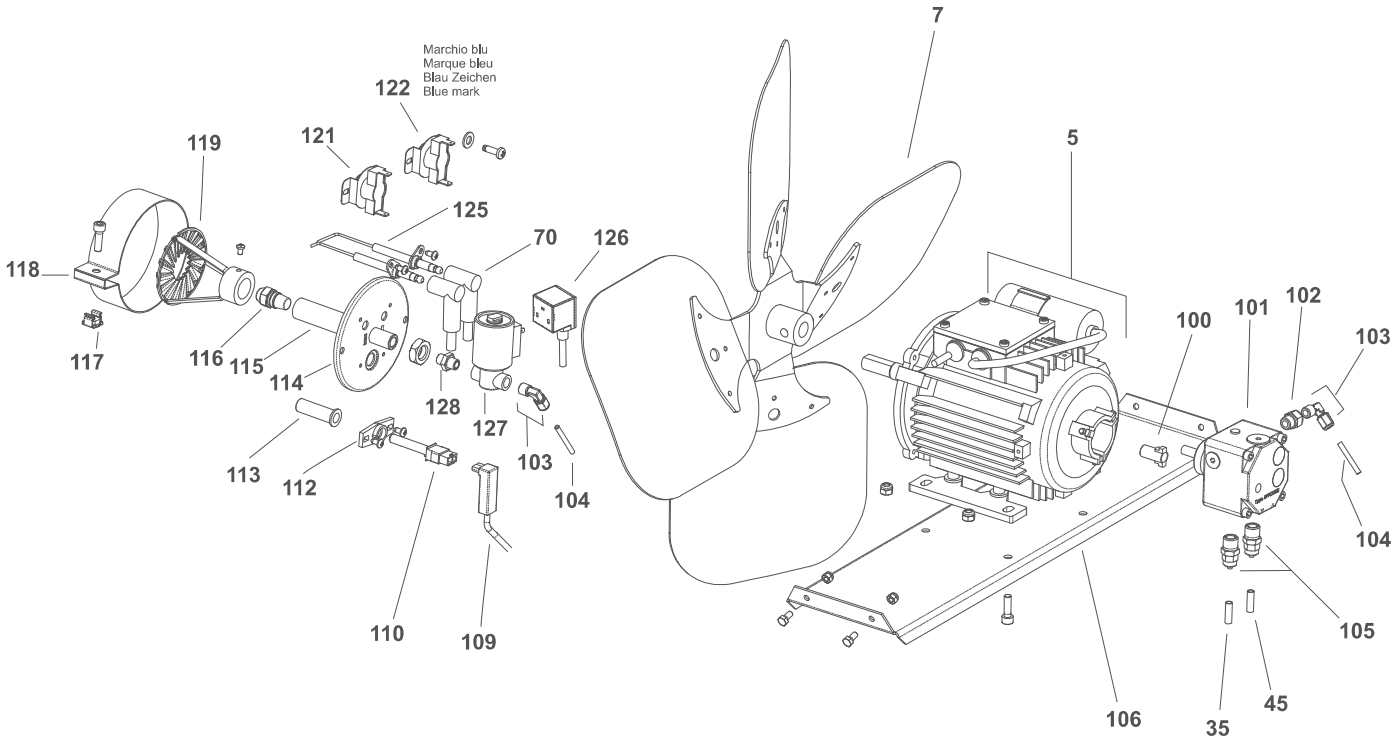

| Pos. | Code NR | Description |
|---|---|---|
| 1 | 4111.604 | Upper body |
| 2 | 4032.458 | Upper body mobile |
| 3 | 4111.241 | Elastic plate Ø 4,2 |
| 4 | 4032.465 | Inlet grille |
| 5 | 4032.431 | Motor 4PW 230V/50 IP44 |
| 6 | 4032.463 | Motor flange support |
| 7 | 4032.430 | Fan Ø 500mm-27° |
| 8 | 4111.056 | Protection cable |
| 9 | 4032.518 | Central Air flap |
| 10 | 4104.170 | Clip nut |
| 11 | 4032.452 | Outlet cone |
| 12 | 4111.638 | Combustion chamber |
| 13 | 4032.460 | Lower body |
| 14 | 4032.462 | Air flap |
| 15 | 4032.470 | Base |
| 16 | 4032.466 | Electr. componets drawer panel |
| 17 | 4032.468 | Side Panel |
| 18 | 4032.536 | Power cord hook |
| 19 | 4160.646 | Protection cable |
| 20 | 4032.475 | Fuel level probe L=241,3 |
| 21 | 4032.537 | Tank plug seal |
| 22 | 4032.480 | Handle frame |
| 23 | 4032.476 | Foot frame |
| 24 | 4100.632 | Drain plug |
| 25 | 4032.439 | Fuel tank |
| 26 | 4111.480 | Wheel plug |
| 27 | 4111.072 | Wheel holder Ø 20 |
| 28 | 4110.978 | Wheel |
| 29 | 4032.478 | Axle |
| 30 | 4101.151 | Protection cable |
| 34 | 4032.488 | Conn. straight M10 |
| 35 | 4032.436 | Fuel pipe pump-tank |
| 36 | 4032.092 | Pipe connection M10 |
| 37 | 4032.434 | Fuel pipe tank-filter |
| 38 | 4031.803 | Connection 90° 3/8" |
| 39 | 4032.437 | Filter support |
| 40 | 4111.045 | Filter with cartidge 3/8" |
| 41 | 4031.015 | Filter cartridge |
| 42 | 4031.802 | Double screw |
| 43 | 4031.800 | Conn. straight 3/8" Mx5 |
| 44 | 4111.273 | Connection 90° 1/8" |
| 45 | 4032.435 | Fuel pipe filter-pump |
| 46 | 4111.116 | OR KIT filter |
| 50 | 4032.466 | Electr. componets drawer panel |
| 51 | 4117.058 | Pilot lamp 230V |
| 52 | 4111.040 | Fuse (6,3x32) 10 A |
| 53 | 4111.038 | Cable fastener |
| 54 | 4111.153 | Power cord 3mt |
| 55 | 4111.118 | Thermostat plug |
| 56 | 4111.119 | Thermostat socket |

| Pos. | Code NR | Description |
|---|---|---|
| 57 | 4160.637 | Switch 16A |
| 58 | 4110.968 | Control box Satronic |
| 59 | 4032.448 | Electr. Components base |
| 60 | 4032.499 | Control box support |
| 61 | 4110.969 | Control box base |
| 62 | 4110.967 | PG plate |
| 63 | 4110.155 | Edge Liner |
| 64 | 4111.033 | Terminal board |
| 65 | 4160.639 | Pop rivet with termin. 4 way |
| 66 | 4032.450 | Plastic pin |
| 67 | 4111.032 | Relay Finder |
| 68 | 4111.030 | Transformer support |
| 69 | 4031.035 | Transformer |
| 70 | 4110.971 | H.T. cable |
| 100 | 4111.081 | Coupling Simel |
| 101 | 4032.432 | Pump Danfoss |
| 102 | 4161.501 | Nut for bicone 1/8 |
| 103 | 4161.140 | Connection 90° 1/8" |
| 104 | 4032.433 | Oil supply pipe |
| 105 | 4031.160 | Conn. Straight 1/4" |
| 106 | 4032.463 | Motor flange support |
| 109 | 4110.970 | Photocell conn. cable. |
| 110 | 4110.966 | Photocell |
| 112 | 4111.076 | Photocell block bracket |
| 113 | 4032.406 | Photocell support |
| 114 | 4032.405 | Burner flange Ø 101,6mm |
| 115 | 4032.403 | Nozzle support |
| 116 | 4111.143 | Nozzle 2,00 GPH 80°H |
| 117 | 4032.454 | Nut M6 |
| 118 | 4032.453 | Air regulatoin flap |
| 119 | 4032.570 | Turbo disc |
| 121 | 4031.045 | Fan Thermostat |
| 122 | 4031.047 | Limit Thermostat |
| 125 | 4031.095 | Electrode |
| 126 | 4032.110 | Power cord Solenoid spool |
| 127 | 4102.535 | Solenoid spool 230V/50Hz |
| 128 | 4160.968 | Conn. straight 1/8" |

# B360 MODEL 2010



From Serial Number: 30200001

Edizione 2010
Rev. A

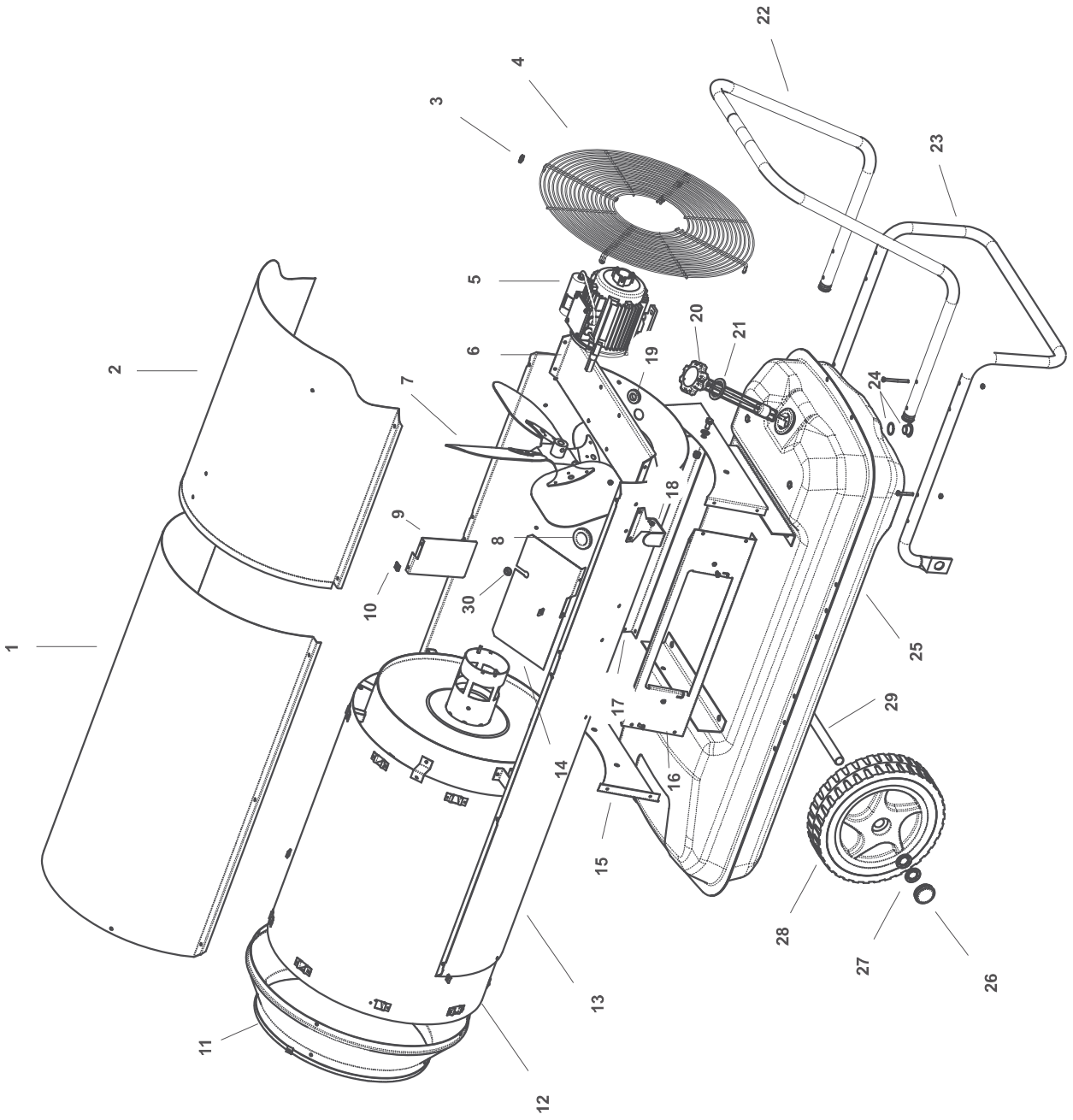

From Serial Number: 30200001

Edizione 2010
Rev. A

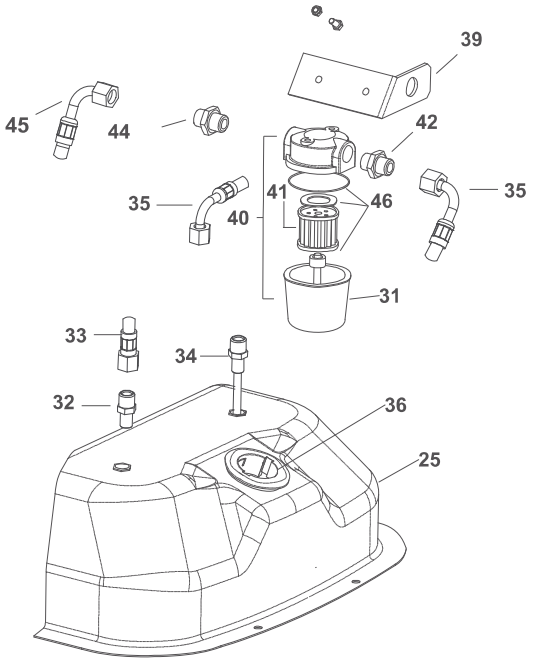


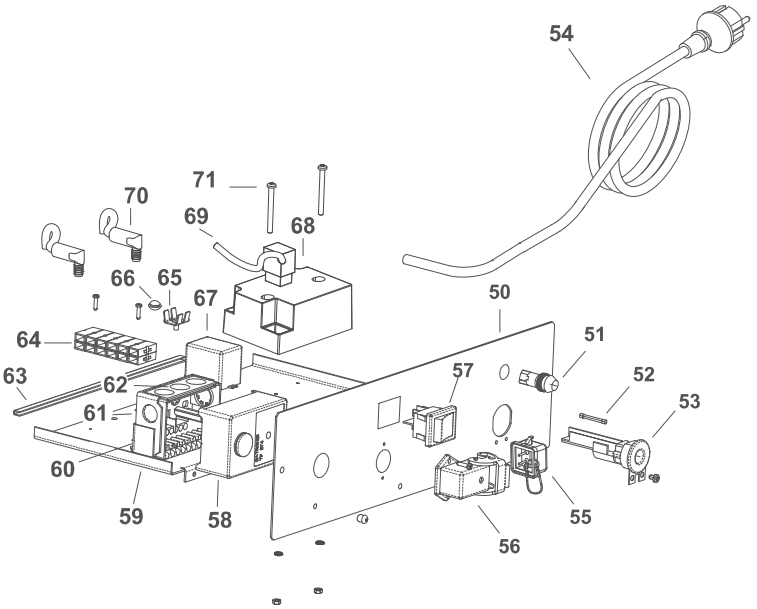


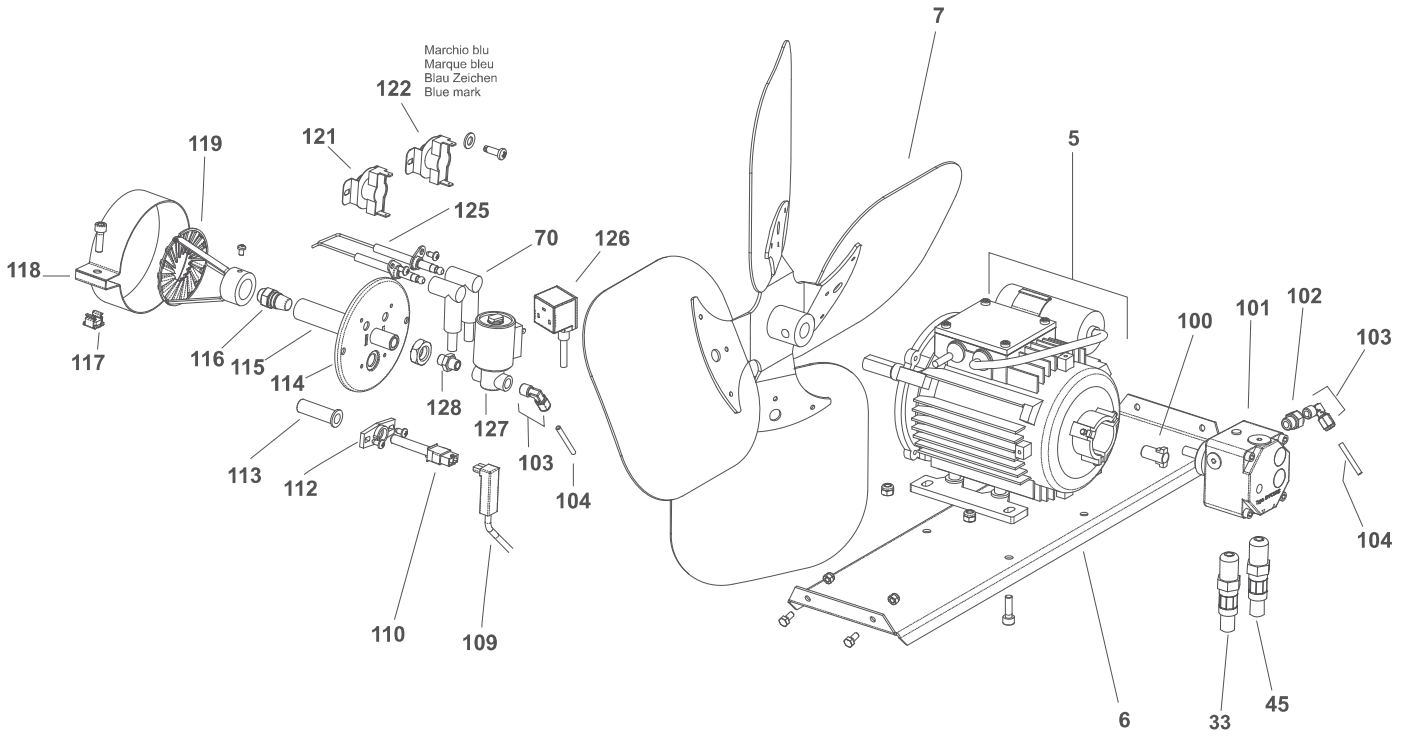

| Pos. | Code NR | Description |
|---|---|---|
| 1 | 4111.604 | UPPER BODY |
| 2 | 4032.458 | UPPER BODY MOBILE |
| 3 | 4111.241 | ELASTIC PLATE Ø 4,2 |
| 4 | 4032.465 | INLET GRILL |
| 5 | 4032.431 | MOTOR 4PW 230V/50 IP44 |
| 6 | 4032.463 | MOTOR FLANGE SUPPORT |
| 7 | 4032.430 | FAN |
| 8 | 4111.056 | PROTECTION CABLE |
| 9 | 4032.518 | CENTRAL AIR FLAP |
| 10 | 4104.170 | CLIP NUT |
| 11 | 4032.452 | OUTLET CONE |
| 12 | 4111.638 | COMBUSTION CHAMBER |
| 13 | 4032.460 | LOWER BODY |
| 14 | 4032.462 | AIR FLAP |
| 15 | 4032.470 | BASE |
| 16 | 4032.466 | ELECTR. COMPONENTS DRAWER PANEL |
| 17 | 4032.468 | SIDE PANEL |
| 18 | 4032.536 | POWER CORD HOOK |
| 19 | 4160.646 | PROTECTION CABLE |
| 20 | 4032.475 | FUEL LEVEL PROBE |
| 21 | 4032.537 | FUEL LEVEL PROBE GASKET |
| 22 | 4032.480 | HANDLE FRAME |
| 23 | 4032.476 | FOOT FRAME |
| 24 | 4100.632 | DRAIG PLUG |
| 25 | 4032.439 | FUEL TANK |
| 26 | 4111.480 | WHEEL PLUG |
| 27 | 4111.072 | WHEEL PLUG Ø 20 |
| 28 | 4110.978 | WHEEL |
| 29 | 4032.478 | AXLE |
| 30 | 4101.151 | PROTECTION CABLE |
| 31 | 4031.180 | FILTER HOUSING |
| 32 | 4031.068 | CONN. STRAIGHT 1/4" |
| 33 | 4031.062 | FUEL PIPE PUMP-TANK |
| 34 | 4031.067 | PIPE CONNECTION 1/4" |
| 35 | 4031.063 | FUEL PIPE TANK-FILTER |
| 36 | 4032.472 | NECK PLASTIC FILLER |
| 39 | 4032.437 | FILTER SUPPORT |
| 40 | 4031.070 | FILTER WITH CARTIDGE 3/8" |
| 41 | 4031.015 | FILTER CARTIDGE |
| 42 | 4031.064 | DOUBLE SCREW |
| 44 | 4117.049 | DOUBLE SCREW |
| 45 | 4031.061 | FUEL PIPE FILTER-PUMP |
| 46 | 4111.116 | OR KIT FILTER |
| 50 | 4032.446 | ELECTR. COMPONENTS DRAWER PANEL |
| 51 | 4117.058 | PILOT LAMP |
| 52 | 4111.040 | FUSE (6,3X32) 10 A |
| 53 | 4111.038 | CABLE FASTENER |

| Pos. | Code NR | Description |
|---|---|---|
| 54 | 4111.153 | POWER CORD |
| 55 | 4162.467 | CAP FOR THERMOSTAT SOCKET |
| 56 | 4111.119 | THERMOSTAT SOCKET |
| 57 | 4160.637 | SWITCH 16A |
| 58 | 4110.968 | CONTROL BOX SATRONIC |
| 59 | 4032.448 | ELECTR. COMPONENTS BASE |
| 60 | 4032.499 | CONTROL BOX SUPPORT |
| 61 | 4110.969 | CONTROL BOX BASE |
| 62 | 4110.967 | PG PLATE |
| 63 | 4110.155 | EDGE LINER |
| 64 | 4111.033 | TERMINAL BOARD |
| 65 | 4160.639 | POP RIVET WITH TERMIN. 4 WAY |
| 66 | 4032.450 | PLASTIC PIN |
| 67 | 4111.032 | RELAY FINDER |
| 68 | 4031.541 | TRANSFORMER |
| 69 | 4110.491 | TRANSFORMER POWER CORD |
| 70 | 4110.490 | H.T. CABLE |
| 71 | 4160.421 | M4 SCREW |
| 100 | 4111.081 | COUPLING SIMEL |
| 101 | 4032.432 | PUMP DANFOSS |
| 102 | 4161.501 | NUT FOR BICONE 1/8 |
| 103 | 4161.140 | CONNECTION 90° 1/8 |
| 104 | 4032.433 | OIL SUPPLY PIPE |
| 109 | 4110.970 | PHOTOCELL CONN. CABLE |
| 110 | 4110.966 | PHOTOCELL |
| 112 | 4111.076 | PHOTOCELL BLOCK BRACKET |
| 113 | 4032.406 | PHOTOCELL SUPPORT |
| 114 | 4032.405 | BURNER FLANGE |
| 115 | 4032.403 | NOZZLE SUPPORT |
| 116 | 4111.143 | NOZZLE 2,00 GPH 80°H |
| 117 | 4032.454 | M6 NUT |
| 118 | 4032.453 | AIR REGULATION FLAP |
| 119 | 4032.570 | TURBO DISC |
| 121 | 4031.045 | FAN THERMOSTAT |
| 122 | 4031.047 | LIMIT THERMOSTAT |
| 125 | 4031.095 | ELECTRODE |
| 126 | 4032.110 | POWER CORD SOLENOID SPOOL |
| 127 | 4102.535 | SOLENOID SPOOL 230V/50Hz |
| 128 | 4160.968 | CONN. STRAIGHT 1/8" |

# B 360 2011 MODEL



From Serial Number: 31200285

Edizione 2011
Rev. A

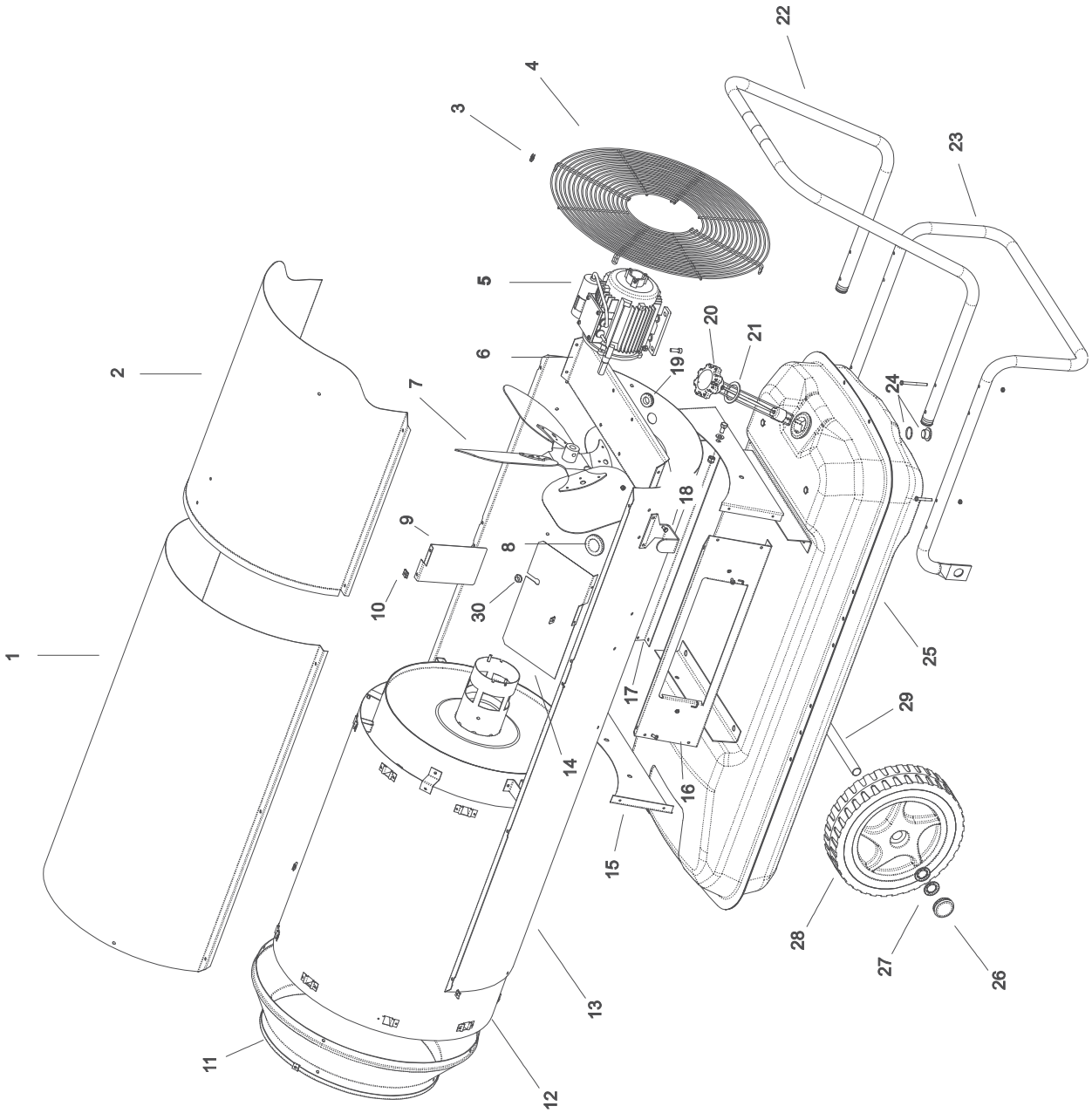

From Serial Number: 31200285

Edizione 2011
Rev. A

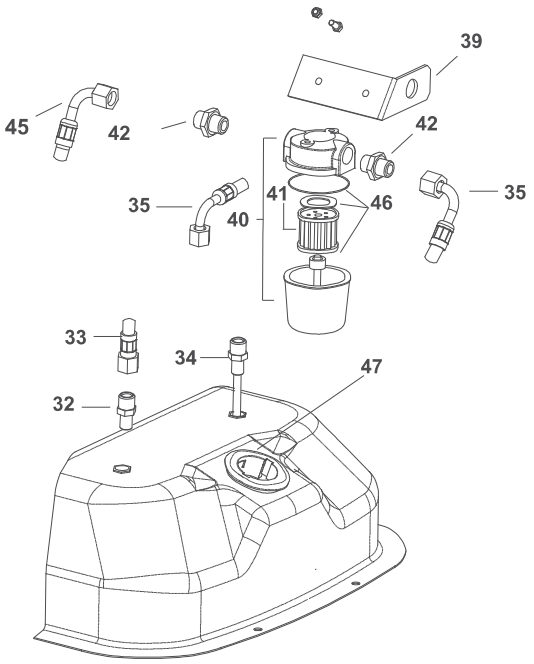


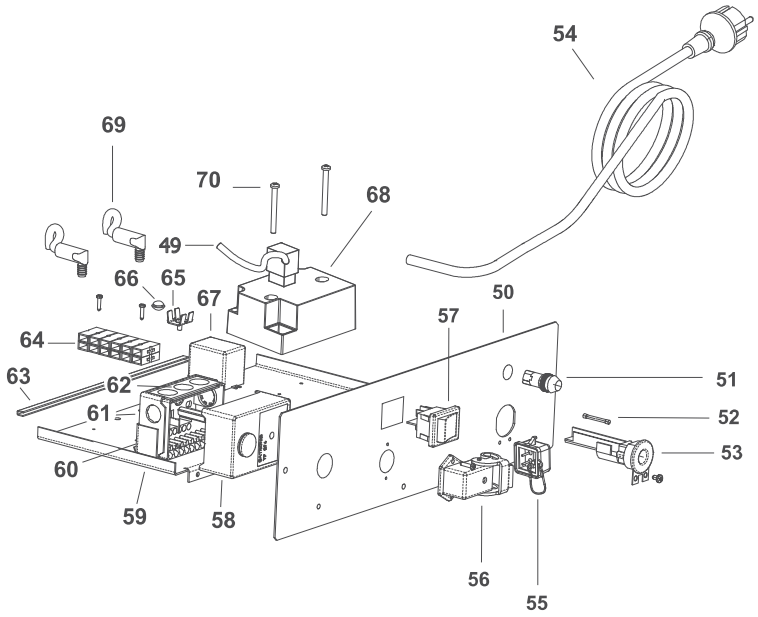


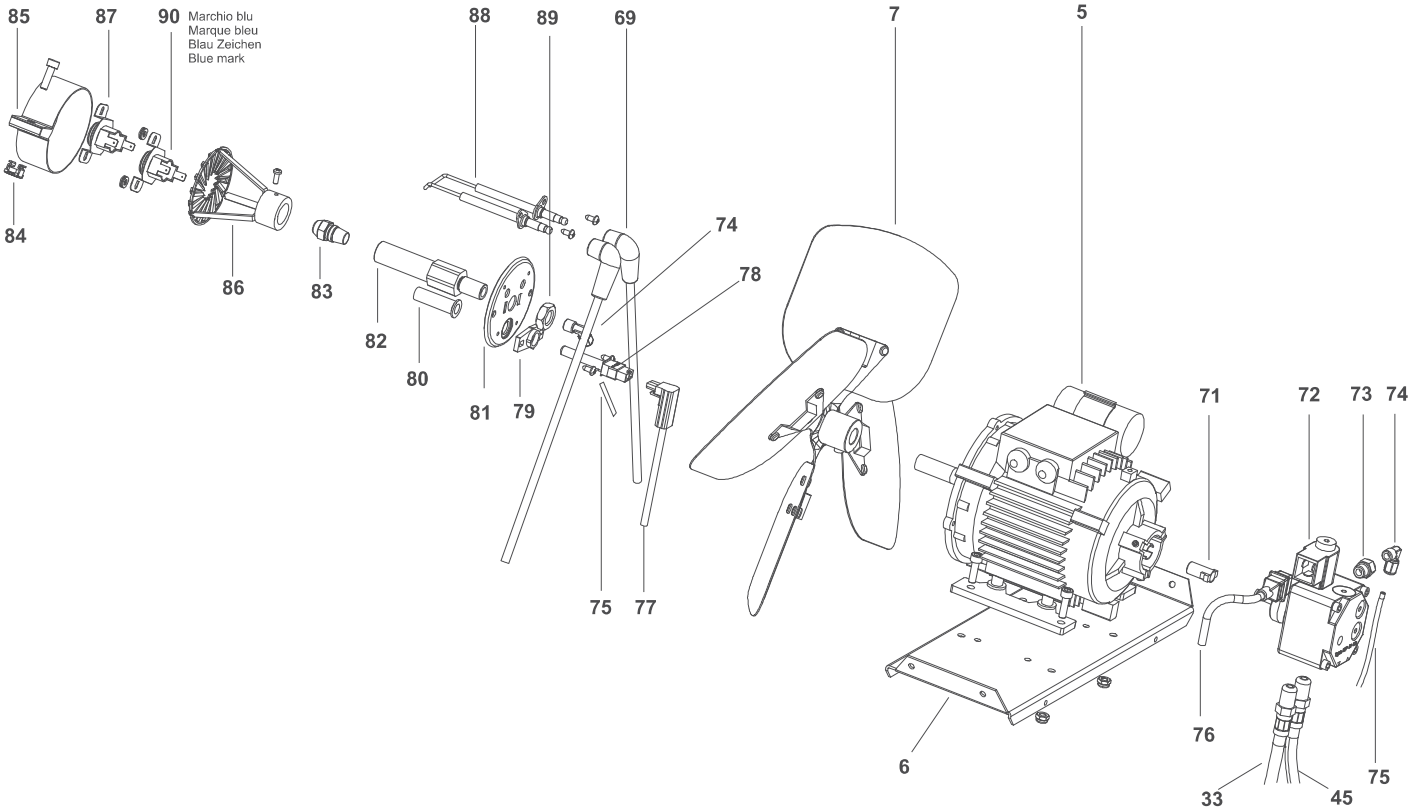

| Pos. | Code NR | Description |
|---|---|---|
| 1 | 4111.604 | UPPER BODY |
| 2 | 4032.458 | UPPER BODY MOBILE |
| 3 | 4111.241 | ELASTIC PLATE Ø 4,2 |
| 4 | 4032.465 | INLET GRILL |
| 5 | 4032.431 | MOTOR 4PW 230V/50 IP44 |
| 6 | 4032.463 | MOTOR FLANGE SUPPORT |
| 7 | 4032.430 | FAN |
| 8 | 4111.056 | PROTECTION CABLE |
| 9 | 4032.518 | CENTRAL AIR FLAP |
| 10 | 4104.170 | CLIP NUT |
| 11 | 4032.452 | OUTLET CONE |
| 12 | 4111.638 | COMBUSTION CHAMBER |
| 13 | 4032.460 | LOWER BODY |
| 14 | 4111.610 | AIR FLAP |
| 15 | 4032.470 | BASE |
| 16 | 4032.466 | ELECTR. COMPONENTS DRAWER PANEL |
| 17 | 4032.468 | SIDE PANEL |
| 18 | 4032.536 | POWER CORD HOOK |
| 19 | 4160.646 | PROTECTION CABLE |
| 20 | 4032.475 | FUEL LEVEL PROBE |
| 21 | 4032.537 | FUEL LEVEL PROBE GASKET |
| 22 | 4032.480 | HANDLE FRAME |
| 23 | 4032.476 | FOOT FRAME |
| 24 | 4100.632 | DRAIG PLUG |
| 25 | 4032.439 | FUEL TANK |
| 26 | 4111.480 | WHEEL PLUG |
| 27 | 4111.072 | WHEEL PLUG Ø 20 |
| 28 | 4110.978 | WHEEL |
| 29 | 4032.478 | AXLE |
| 30 | 4101.151 | PROTECTION CABLE |
| 32 | 4031.068 | CONN. STRAIGHT 1/4" |
| 33 | 4031.062 | FUEL PIPE PUMP-TANK |
| 34 | 4031.067 | PIPE CONNECTION 1/4" |
| 35 | 4031.063 | FUEL PIPE TANK-FILTER |
| 39 | 4032.437 | FILTER SUPPORT |
| 40 | 4031.070 | FILTER WITH CARTIDGE 3/8" |
| 41 | 4031.015 | FILTER CARTIDGE |
| 42 | 4031.064 | DOUBLE SCREW |
| 45 | 4031.061 | FUEL PIPE FILTER-PUMP |
| 46 | 4111.116 | OR KIT FILTER |
| 47 | 4032.472 | NECK PLASTIC FILLER |
| 49 | 4110.491 | TRANSFORMER POWER CORD |
| 50 | 4032.446 | ELECTR. COMPONENTS DRAWER PANEL |

| Pos. | Code NR | Description |
|---|---|---|
| 51 | 4117.058 | PILOT LAMP |
| 52 | 4111.040 | FUSE (6,3X32) 10 A |
| 53 | 4111.038 | CABLE FASTENER |
| 54 | 4111.153 | POWER CORD |
| 55 | 4162.467 | CAP FOR THERMOSTAT SOCKET |
| 56 | 4111.119 | THERMOSTAT SOCKET |
| 57 | 4160.637 | SWITCH 16A |
| 58 | 4110.968 | CONTROL BOX SATRONIC |
| 59 | 4032.448 | ELECTR. COMPONENTS BASE |
| 60 | 4032.499 | CONTROL BOX SUPPORT |
| 61 | 4110.969 | CONTROL BOX BASE |
| 62 | 4110.967 | PG PLATE |
| 63 | 4110.155 | EDGE LINER |
| 64 | 4111.033 | TERMINAL BOARD |
| 65 | 4160.639 | POP RIVET WITH TERMIN. 4 WAY |
| 66 | 4032.450 | PLASTIC PIN |
| 67 | 4111.032 | RELAY FINDER |
| 68 | 4031.541 | TRANSFORMER |
| 69 | 4110.490 | H.T. CABLE |
| 70 | 4160.421 | M4 SCREW |
| 71 | 4111.081 | COUPLING SIMEL |
| 72 | 4033.122 | PUMP DANFOSS |
| 73 | 4161.501 | NUT FOR BICONE 1/8 |
| 74 | 4161.140 | CONNECTION 90° 1/8 |
| 75 | 4032.433 | OIL SUPPLY PIPE |
| 76 | 4033.087 | POWER CORD PUMP |
| 77 | 4110.970 | PHOTOCELL CONN. CABLE |
| 78 | 4110.966 | PHOTOCELL |
| 79 | 4111.076 | PHOTOCELL BLOCK BRACKET |
| 80 | 4032.406 | PHOTOCELL SUPPORT |
| 81 | 4032.405 | BURNER FLANGE |
| 82 | 4032.403 | NOZZLE SUPPORT |
| 83 | 4111.143 | NOZZLE 2,00 GPH 80°H |
| 84 | 4032.454 | M6 NUT |
| 85 | 4032.453 | AIR REGULATION FLAP |
| 86 | 4033.071 | TURBO DISC |
| 87 | 4031.045 | FAN THERMOSTAT |
| 88 | 4033.057 | ELECTRODE |
| 89 | 4032.407 | NUT M14 |
| 90 | 4031.047 | LIMIT THERMOSTAT |

# B 360 MODEL 2012



From Serial Number: 32200522

Edizione 2012
Rev. A

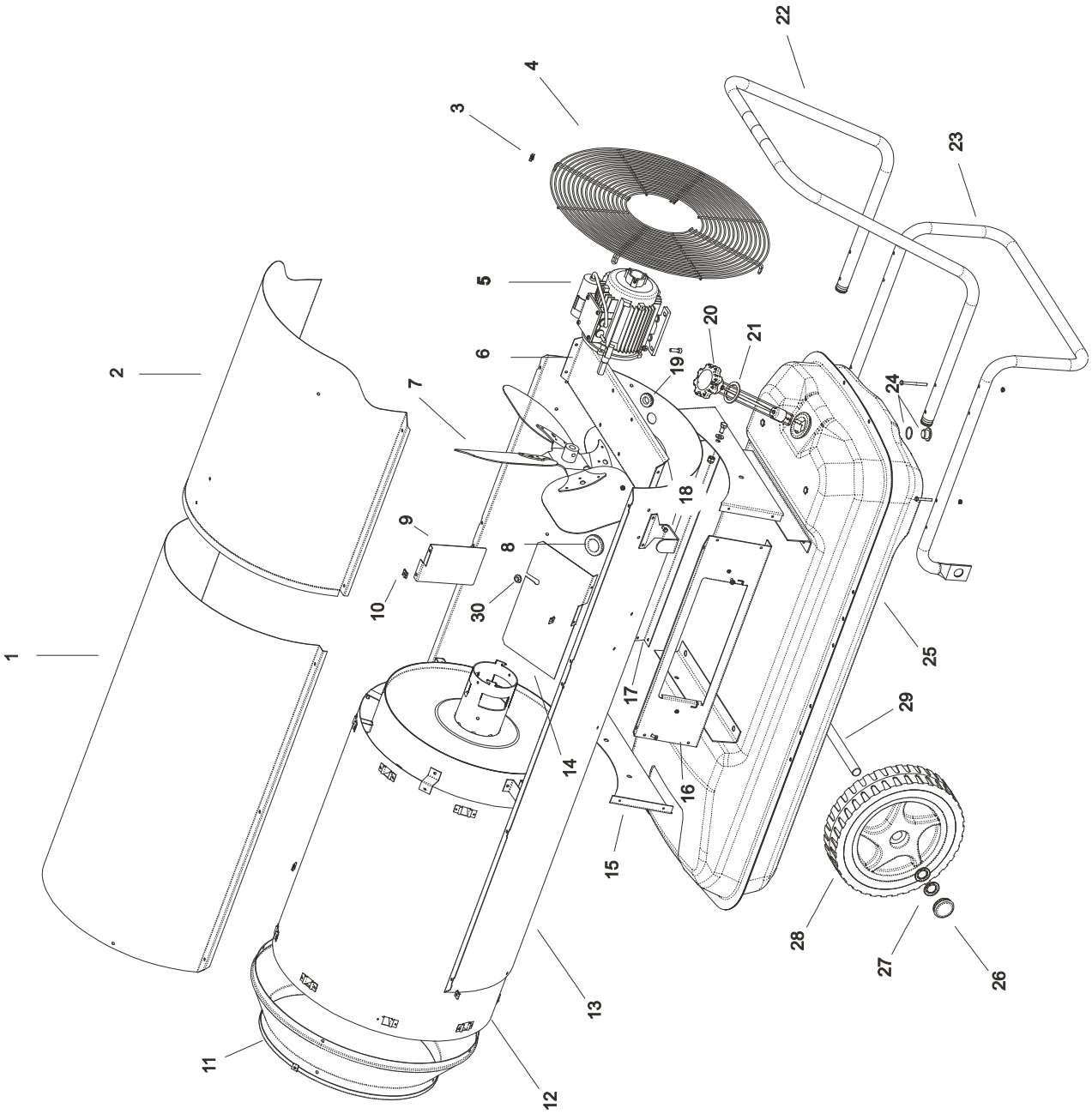

From Serial Number: 32200523

Rev.A - May 2012

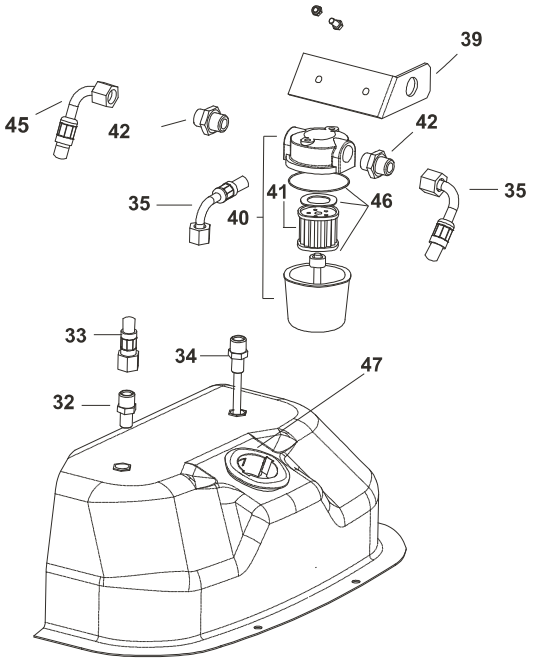


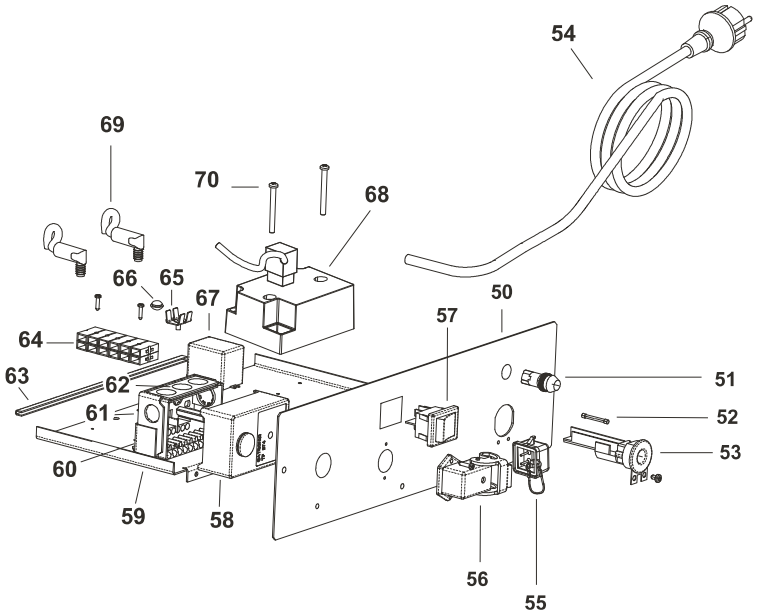


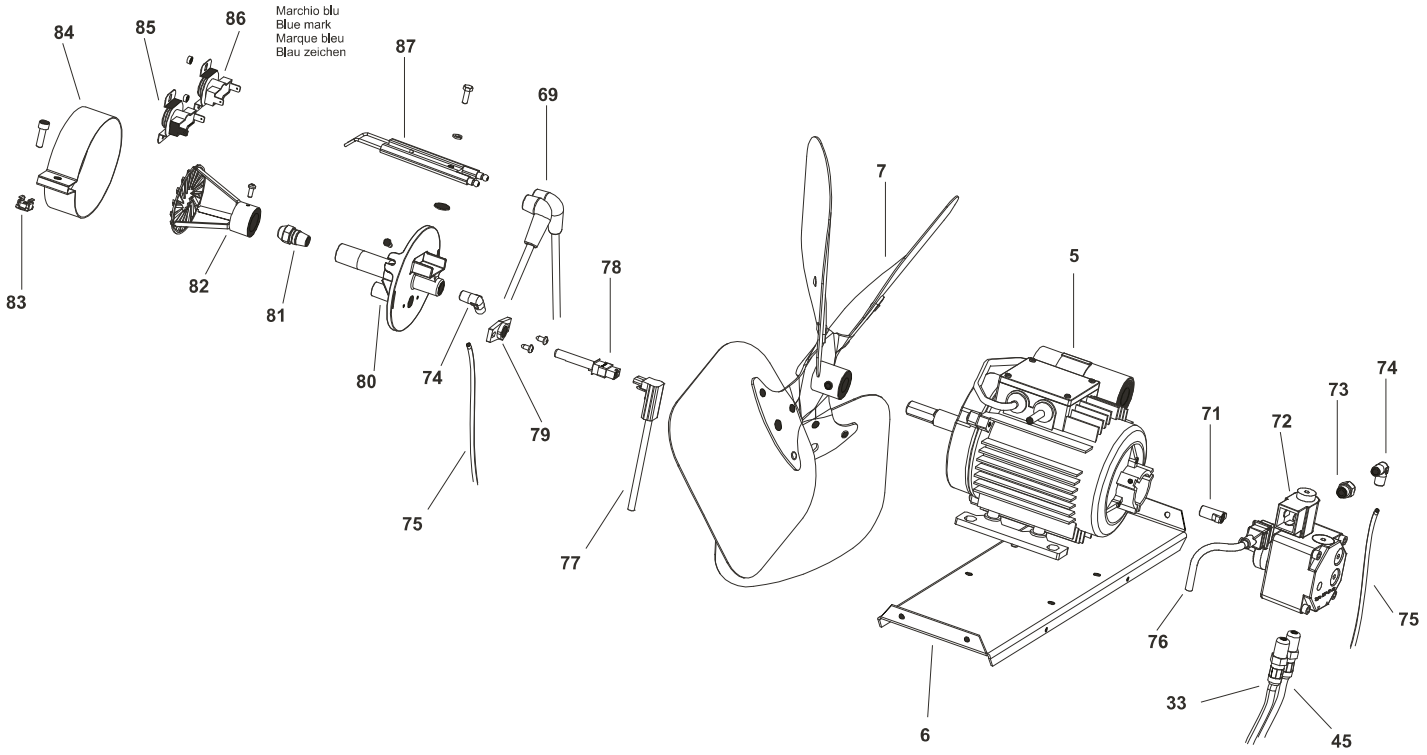

| Pos. | Code NR | Description |
|---|---|---|
| 1 | 4111.604 | UPPER BODY |
| 2 | 4032.458 | UPPER BODY MOBILE |
| 3 | 4111.241 | ELASTIC PLATE Ø 4,2 |
| 4 | 4032.465 | INLET GRILL |
| 5 | 4032.431 | MOTOR 4PW 230V/50 IP44 |
| 6 | 4032.463 | MOTOR FLANGE SUPPORT |
| 7 | 4032.430 | FAN |
| 8 | 4111.056 | PROTECTION CABLE |
| 9 | 4032.518 | CENTRAL AIR FLAP |
| 10 | 4104.170 | CLIP NUT |
| 11 | 4032.452 | OUTLET CONE |
| 12 | 4033.197 | COMBUSTION CHAMBER |
| 13 | 4032.460 | LOWER BODY |
| 14 | 4111.610 | AIR FLAP |
| 15 | 4032.470 | BASE |
| 16 | 4032.466 | ELECTR. COMPONENTS DRAWER PANEL |
| 17 | 4032.468 | SIDE PANEL |
| 18 | 4032.536 | POWER CORD HOOK |
| 19 | 4160.646 | PROTECTION CABLE |
| 20 | 4032.475 | FUEL LEVEL PROBE |
| 21 | 4032.537 | FUEL LEVEL PROBE GASKET |
| 22 | 4032.480 | HANDLE FRAME |
| 23 | 4032.476 | FOOT FRAME |
| 24 | 4100.632 | DRAIG PLUG |
| 25 | 4032.439 | FUEL TANK |
| 26 | 4111.480 | WHEEL PLUG |
| 27 | 4111.072 | WHEEL PLUG Ø 20 |
| 28 | 4110.978 | WHEEL |
| 29 | 4032.478 | AXLE |
| 30 | 4101.151 | PROTECTION CABLE |
| 32 | 4031.068 | CONN. STRAIGHT 1/4" |
| 33 | 4031.062 | FUEL PIPE PUMP-TANK |
| 34 | 4031.067 | PIPE CONNECTION 1/4" |
| 35 | 4031.063 | FUEL PIPE TANK-FILTER |
| 39 | 4032.437 | FILTER SUPPORT |
| 40 | 4031.070 | FILTER WITH CARTIDGE 3/8" |
| 41 | 4031.015 | FILTER CARTIDGE |
| 42 | 4031.064 | DOUBLE SCREW |
| 45 | 4031.061 | FUEL PIPE FILTER-PUMP |
| 46 | 4111.116 | OR KIT FILTER |
| 47 | 4032.472 | NECK PLASTIC FILLER |
| 50 | 4032.446 | ELECTR. COMPONENTS DRAWER PANEL |
| 51 | 4117.058 | PILOT LAMP |

| Pos. | Code NR | Description |
|---|---|---|
| 52 | 4111.040 | FUSE (6,3X32) 10 A |
| 53 | 4111.038 | CABLE FASTENER |
| 54 | 4111.153 | POWER CORD |
| 55 | 4162.467 | CAP FOR THERMOSTAT SOCKET |
| 56 | 4111.119 | THERMOSTAT SOCKET |
| 57 | 4160.637 | SWITCH 16A |
| 58 | 4110.968 | CONTROL BOX SATRONIC |
| 59 | 4032.448 | ELECTR. COMPONENTS BASE |
| 60 | 4032.499 | CONTROL BOX SUPPORT |
| 61 | 4110.969 | CONTROL BOX BASE |
| 62 | 4110.967 | PG PLATE |
| 63 | 4110.155 | EDGE LINER |
| 64 | 4111.033 | TERMINAL BOARD |
| 65 | 4160.639 | POP RIVET WITH TERMIN. 4 WAY |
| 66 | 4032.450 | PLASTIC PIN |
| 67 | 4111.032 | RELAY FINDER |
| 68 | 4031.541 | TRANSFORMER |
| 69 | 4110.490 | H.T. CABLE |
| 70 | 4160.421 | M4 SCREW |
| 71 | 4111.081 | COUPLING SIMEL |
| 72 | 4033.122 | PUMP DANFOSS |
| 73 | 4161.501 | NUT FOR BICONE 1/8 |
| 74 | 4033.198 | CONNECTION 90° 1/8 |
| 75 | 4033.186 | OIL SUPPLY PIPE |
| 76 | 4033.087 | POWER CORD PUMP |
| 77 | 4110.970 | PHOTOCELL CONN. CABLE |
| 78 | 4110.966 | PHOTOCELL |
| 79 | 4111.076 | PHOTOCELL BLOCK BRACKET |
| 80 | 4033.059 | BURNER FLANGE |
| 81 | 4111.143 | NOZZLE 2,00 GPH 80°H |
| 82 | 4033.071 | TURBO DISC |
| 83 | 4032.454 | M6 NUT |
| 84 | 4032.453 | AIR REGULATION FLAP |
| 85 | 4031.045 | FAN THERMOSTAT |
| 86 | 4031.047 | LIMIT THERMOSTAT |
| 87 | 4111.826 | ELECTRODE |

From Serial Number: 09233000649

Edizione 2013
Rev. A

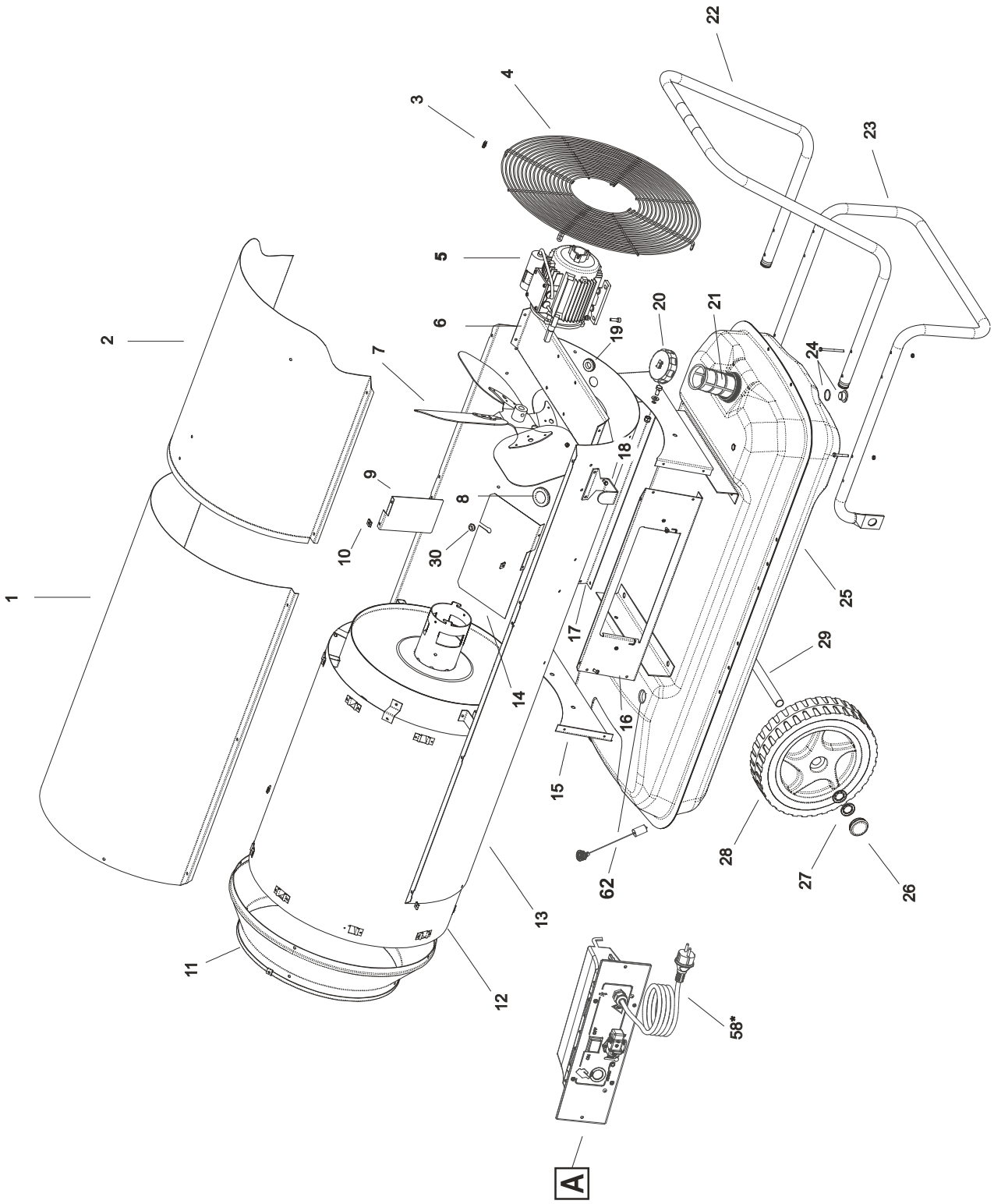

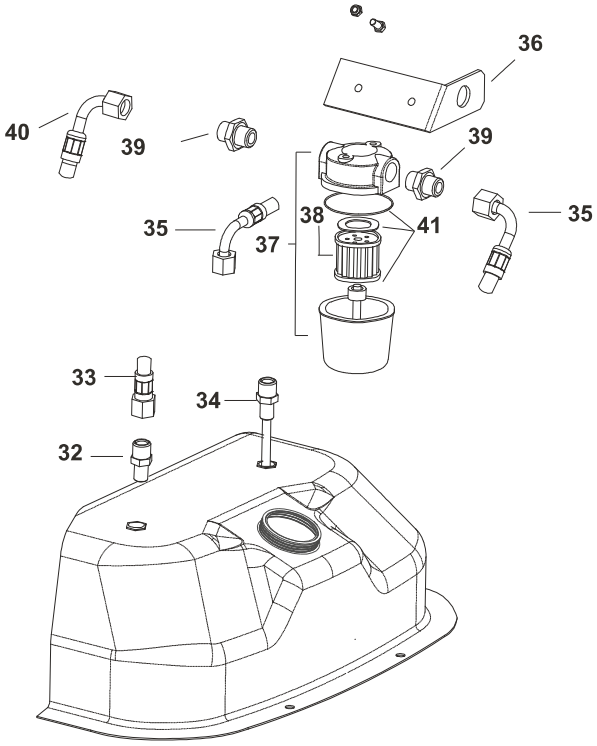
36
40
39
39
35
38
41
35
37
33
34
32

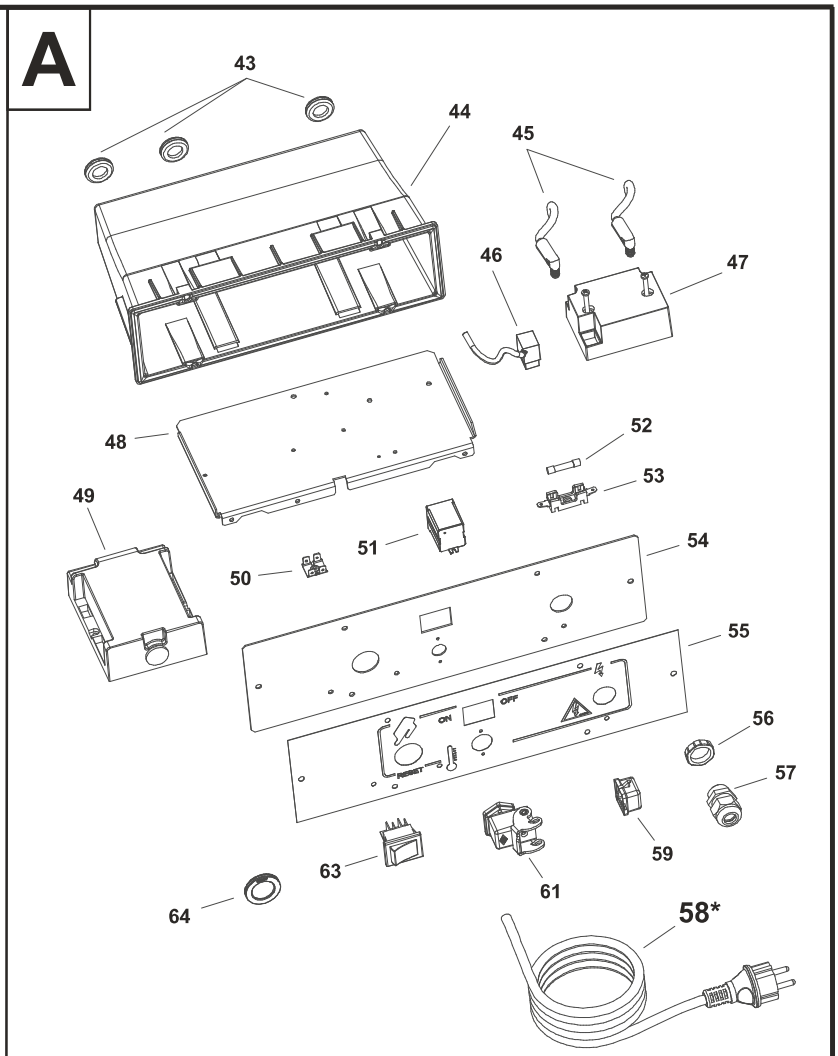
A
43
44
45
46
47
48
52
53
49
51
54
50
55
56
57
59
63
61
64
58*

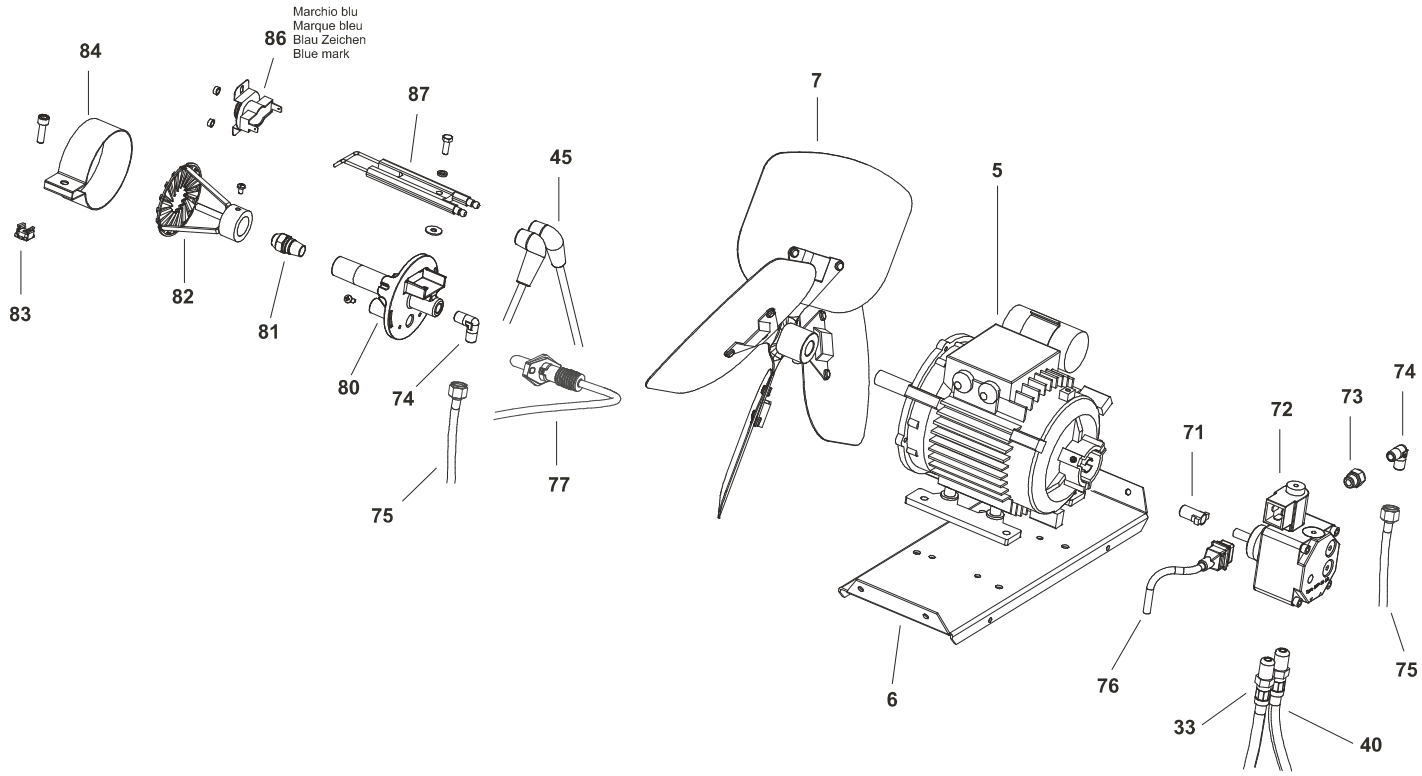
Marchio blu
Marque bleu
Blau Zeichen
Blue mark
86
84
87
7
45
5
83
82
81
80
74
75
77
6
76
71
72
73
74
75
33
40

| Pos. | Code NR | Description |
|---|---|---|
| 1 | 4111.604 | UPPER BODY |
| 2 | 4033.263 | UPPER BODY MOBILE |
| 3 | 4111.241 | ELASTIC PLATE Ø 4,2 |
| 4 | 4032.465 | INLET GRILL |
| 5 | 4032.431 | MOTOR |
| 6 | 4032.463 | MOTOR FLANGE SUPPORT |
| 7 | 4032.430 | FAN |
| 8 | 4111.056 | PROTECTION CABLE |
| 9 | 4032.518 | CENTRAL AIR FLAP |
| 10 | 4104.170 | CLIP NUT |
| 11 | 4033.223 | OUTLET CONE |
| 12 | 4033.197 | COMBUSTION CHAMBER |
| 13 | 4033.264 | LOWER BODY |
| 14 | 4111.610 | AIR FLAP |
| 15 | 4032.470 | BASE |
| 16 | 4032.466 | ELECTR. COMPONENTS DRAWER PANEL |
| 17 | 4032.468 | SIDE PANEL |
| 18 | 4032.536 | POWER CORD HOOK |
| 19 | 4160.646 | PROTECTION CABLE |
| 20 | 4260.100 | TANK CAP |
| 21 | 4290.083 | TANK FILTER |
| 22 | 4032.480 | HANDLE FRAME |
| 23 | 4032.476 | FOOT FRAME |
| 24 | 4100.632 | DRAIG PLUG |
| 25 | 4033.243 | FUEL TANK |
| 26 | 4111.480 | WHEEL PLUG |
| 27 | 4111.072 | WHEEL PLUG Ø 20 |
| 28 | 4110.978 | WHEEL |
| 29 | 4032.478 | AXLE |
| 30 | 4101.151 | PROTECTION CABLE |
| 32 | 4031.068 | CONN. STRAIGHT 1/4" |
| 33 | 4031.062 | FUEL PIPE PUMP-TANK |
| 34 | 4031.067 | PIPE CONNECTION 1/4" |
| 35 | 4031.063 | FUEL PIPE TANK-FILTER |
| 36 | 4032.437 | FILTER SUPPORT |
| 37 | 4031.070 | FILTER WITH CARTIDGE 3/8" |
| 38 | 4031.015 | FILTER CARTIDGE |
| 39 | 4031.064 | DOUBLE SCREW |
| 40 | 4031.061 | FUEL PIPE FILTER-PUMP |

| Pos. | Code NR | Description |
|---|---|---|
| 41 | 4111.116 | OR KIT FILTER |
| 43 | 4162.500 | PROTECTION CABLE |
| 44 | 4033.257 | PLASTIX BOX |
| 45 | 4110.490 | HT CABLE |
| 46 | 4033.256 | TRANSFORMER POWER CORD |
| 47 | 4031.541 | TRANSFORMER |
| 48 | 4033.249 | CONTROL BASE |
| 49 | 4033.250 | CONTROL BOX |
| 50 | 4160.639 | POP RIVET 4 WAY |
| 51 | 4111.032 | RELAY |
| 52 | 4111.040 | FUSE |
| 53 | 4033.301 | FUSE HOLDER |
| 54 | 4033.248 | FRONTAL CONTROLS PANEL |
| 55 | 4033.254 | PANEL LABEL |
| 56 | 4100.656 | LOCKNUT |
| 57 | 4150.528 | STRAIN RELIEF BUSHING |
| 58 | 4033.253 | POWER CORD SCHUKO |
| 58-A | 4033.252 | POWER CORD NEW ZEALAND |
| 58-B | 4033.302 | POWER CORD UK |
| 59 | 4162.467 | CAP FOR THERMOSTAT SOCKET |
| 61 | 4111.119 | THERMOSTAT SOCKET |
| 62 | 4260.105 | FUEL GAUGE |
| 63 | 4165.204 | ROCKER SWITCH |
| 64 | 4033.251 | BOARD BUTTON CAP |
| 71 | 4111.081 | COUPLING |
| 72 | 4033.122 | PUMP |
| 73 | 4161.501 | CONN. STRAIGHT 1/8" |
| 74 | 4033.198 | ELBOW 1/8" |
| 75 | 4033.186 | OIL SUPPLY PIPE |
| 76 | 4033.087 | PUMP POWER CORD |
| 77 | 4033.246 | PHOTOCELL |
| 80 | 4033.059 | BURNER FLANGE |
| 81 | 4111.143 | NOZZLE |
| 82 | 4033.071 | TURBO DISC |
| 83 | 4032.454 | M6 NUT |
| 84 | 4032.453 | AIR REGOLATION FLAP |
| 86 | 4031.047 | LIMIT THERMOSTAT |
| 87 | 4111.826 | ELECTRODE |

# MODEL B360

**UNIT 1** **ILLUSTRATED PARTS BREAKDOWN**

From Serial Number: 11837000170

Rev.H - Jan. 2017

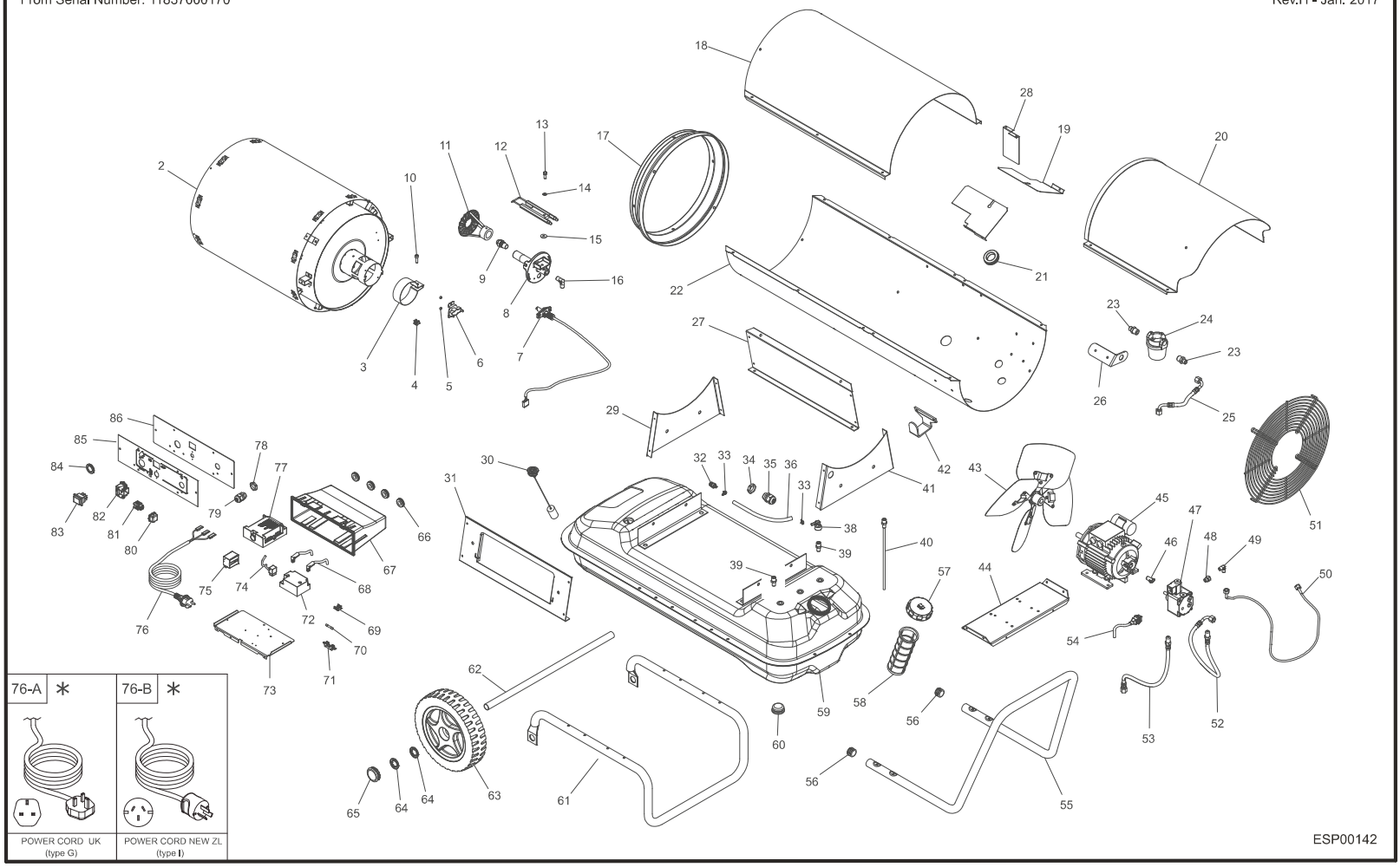

| Pos. | Code NR | Description |
|---|---|---|
| 2 | 4033.197 | COMBUSTION CHAMBER |
| 3 | 4032.453 | AIR DAMPER |
| 4 | 4032.454 | CAGE NUT |
| 5 | 4032.692 | SPACER |
| 6 | 4031.047 | SAFETY THERMOSTAT |
| 7 | 4033.246 | PHOTOCELL SENSOR |
| 8 | 4033.059 | BURNER HEAD |
| 9 | 4111.143 | NOZZLE |
| 10 | 4032.455 | SCREW |
| 11 | 4033.071 | BURNER HEAD DIFFUSER |
| 12 | 4111.826 | BIFILAR ELECTRODES |
| 13 | 4110.363 | SCREW |
| 14 | 4110.393 | ELASTIC WASHER |
| 15 | 4110.394 | FIBER WASHER |
| 16 | 4033.198 | 90° FUEL CONNECTION |
| 17 | 4033.223 | OUTLET CONE |
| 18 | 4111.604 | UPPER SHELL |
| 19 | 4032.462 | AIR DEFLECTOR |
| 20 | 4033.263 | UPPER SHELL - MOBILE |
| 21 | 4111.056 | GASKET |
| 22 | 4033.264 | LOWER SHELL |
| 23 | 4034.378 | STRAIGHT FUEL CONNECTION |
| 24 | 4031.070 | FUEL FILTER |
| 24A | 4111.116 | OR FILTER KIT |
| 24B | 4031.015 | FILTER CARTRIDGE |
| 24C | 4031.180 | FILTER HOUSING |
| 25 | 4031.063 | FUEL PIPE - FILTER TANK |
| 26 | 4032.437 | FILTER BRACKET |
| 27 | 4032.468 | LATERAL PANEL |
| 28 | 4032.518 | UPPER AIR DEFLECTOR |
| 29 | 4032.470 | FRONT PANEL |
| 30 | 4260.105 | FUEL GAUGE |
| 31 | 4032.466 | LATERAL CONTROL PANEL |
| 32 | 4260.246 | BREATH VALVE |
| 33 | 4100.810 | CLIP |
| 34 | 4100.656 | NUT |
| 35 | 4150.528 | STRAIN RELIEF |
| 36 | 4100.187 | RUBBER PIPE |
| 38 | 4100.192 | 90° AIR CONNECTION |
| 39 | 4031.068 | STRAIGH CONNECTION |
| 40 | 4031.067 | SUCTION PIPE |
| 41 | 4034.298 | REAR PANEL |
| 42 | 4032.536 | POWER CORD BRACKET |
| 43 | 4032.430 | FAN |
| 44 | 4032.463 | MOTOR SUPPORT |
| 45 | 4032.431 | MOTOR |
| 46 | 4111.081 | MOTOR PUMP COUPLING |

| Pos. | Code NR | Description |
|---|---|---|
| 47 | 4033.122 | FUEL PUMP |
| 48 | 4161.501 | STRAIGHT FUEL CONNECTION |
| 49 | 4033.198 | 90° FUEL CONNECTION |
| 50 | 4033.186 | FUEL FLEXIBLE PIPE |
| 51 | 4032.465 | GRILLE |
| 52 | 4031.061 | FUEL PIPE - PUMP-FILTER |
| 53 | 4031.062 | FUEL PIPE - PUMP-TANK |
| 54 | 4033.311 | PUMP VALVE POWER CORD |
| 55 | 4032.480 | HANDLE |
| 56 | 4111.057 | HANDLE CAP |
| 57 | 4034.283 | TANK CAP |
| 58 | 4290.213 | TANK FILTER |
| 59 | 4034.295 | TANK |
| 60 | 4100.632 | TANK DRAIN CAP |
| 61 | 4032.476 | WHEELS SUPPORT |
| 62 | 4032.478 | WHEELS AXLE |
| 63 | 4110.978 | WHEEL |
| 64 | 4111.072 | BLOCK WASHER |
| 65 | 4111.480 | WHEEL CAP |
| 66 | 4160.646 | GASKET |
| 67 | 4033.257 | PLASTIC BOX |
| 68 | 4110.490 | HIGH TENSION WIRE |
| 69 | 4160.639 | GROUND FASTON |
| 70 | 4111.040 | FUSE |
| 71 | 4033.301 | FUSE HOLDER |
| 72 | 4031.541 | HIGH TENSION TRANSFORMER |
| 73 | 4033.249 | CONTROL PANEL BASE |
| 74 | 4033.256 | HIGH TENSION TRANSFORMER POWER CORD |
| 75 | 4111.032 | RELAY |
| 76 | 4033.253 | POWER CORD SCHUKO |
| 76A | 4033.302 | POWER CORD UK |
| 76B | 4033.252 | POWER CORD NEW ZEALAND |
| 77 | 4033.250 | PC-BOARD |
| 78 | 4100.656 | NUT |
| 79 | 4150.528 | STRAIN RELIEF |
| 80 | 4162.467 | THERMOSTAT CAP |
| 81 | 4161.400 | THERMOSTAT PLUG |
| 82 | 4111.119 | THERMOSTAT SOCKET |
| 83 | 4165.204 | SWITCH |
| 84 | 4033.251 | PC-BOARD CAP |
| 85 | 4033.254 | CONTROL PANEL LABEL |
| 86 | 4033.248 | CONTROL PANEL |