DATA SHEET

24/03/2016

Receiver	From
Society	
Reference	
Address	
Phone	
Fax	
E-mail	

Item n° :
102657040

Model :
GARDEN-INOX 132 M

Pump data

Impeller size	0 mm
Pressure rating :	8 bar (800 kPa)
Min. fluid temperature :	0 °C
Max. fluid temperature :	35 °C
Max. Ambient temperature :	40 °C

Requested data

Flow :	0.00 m³/h
Head :	0.00 m
Fluid :	Water, pure
Fluid Temperature :	20 °C
Density :	998.3 kg/m³
Kinematic viscosity :	1.005 mm²/s
Vapor pressure :	100.00 kPa

Hydraulic data (duty point)

Flow :	
Head :	

Materials

Pump body	AISI 304 X5 Cr Ni 1810 UNI 6900/71
Impeller	Technopolymer A
Shaft with rotor	AISI 303 X10 CrNiS 1809 UNI 6900/71
OR ring	NBR
Support	Die cast aluminium
Mechanical seal	Carbon/Ceramic
Nozzle venturi diffuser assembly	Technopolymer A

Motor data

Motor brand :	DAB
Nominal power P2 :	1 kW
Rated speed :	2850 rpm
Rated voltage :	1~ 220-240 V 50 Hz
Nominal current :	6.6 A
Degree of protection :	IP 44

Pump connection

Suction side :	1 " G / 8 bar (800 kPa)
Discharge side :	1 " G / 8 bar (800 kPa)

Curve tolerance according to ISO 9906

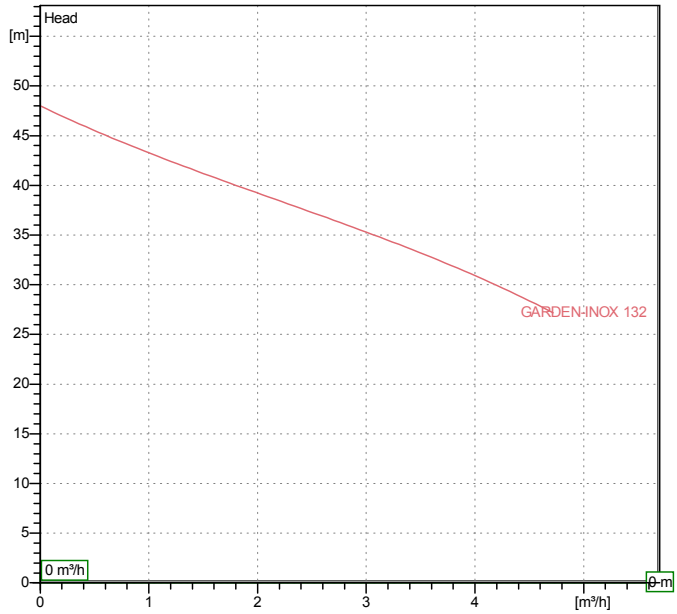

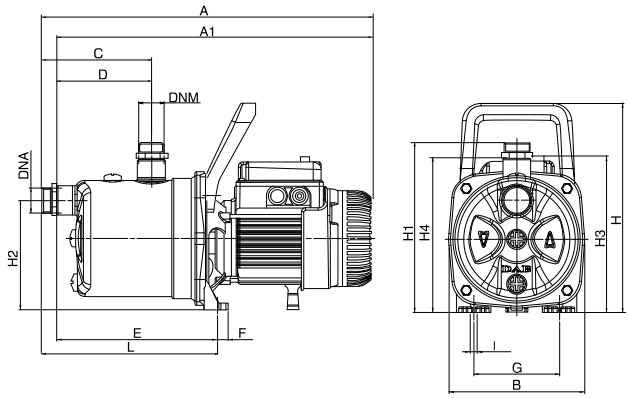

Weight : 11.1 kg

Dimensions in mm

A	444	H2	144
A1	424	H3	209
B	174	H4	197
C	142	I	9
D	122	L	227
DNA	1" G		
DNM	1" G		
E	207		
F	14		
G	111		
H	268		
H1	216		

DAB PUMPS reserves the right to make modifications without notice

PERFORMANCE CURVES

24/03/2016

Receiver	From
Society Reference Address Phone Fax E-mail	

GARDEN-INOX 132 M

Curve tolerance according to ISO 9906

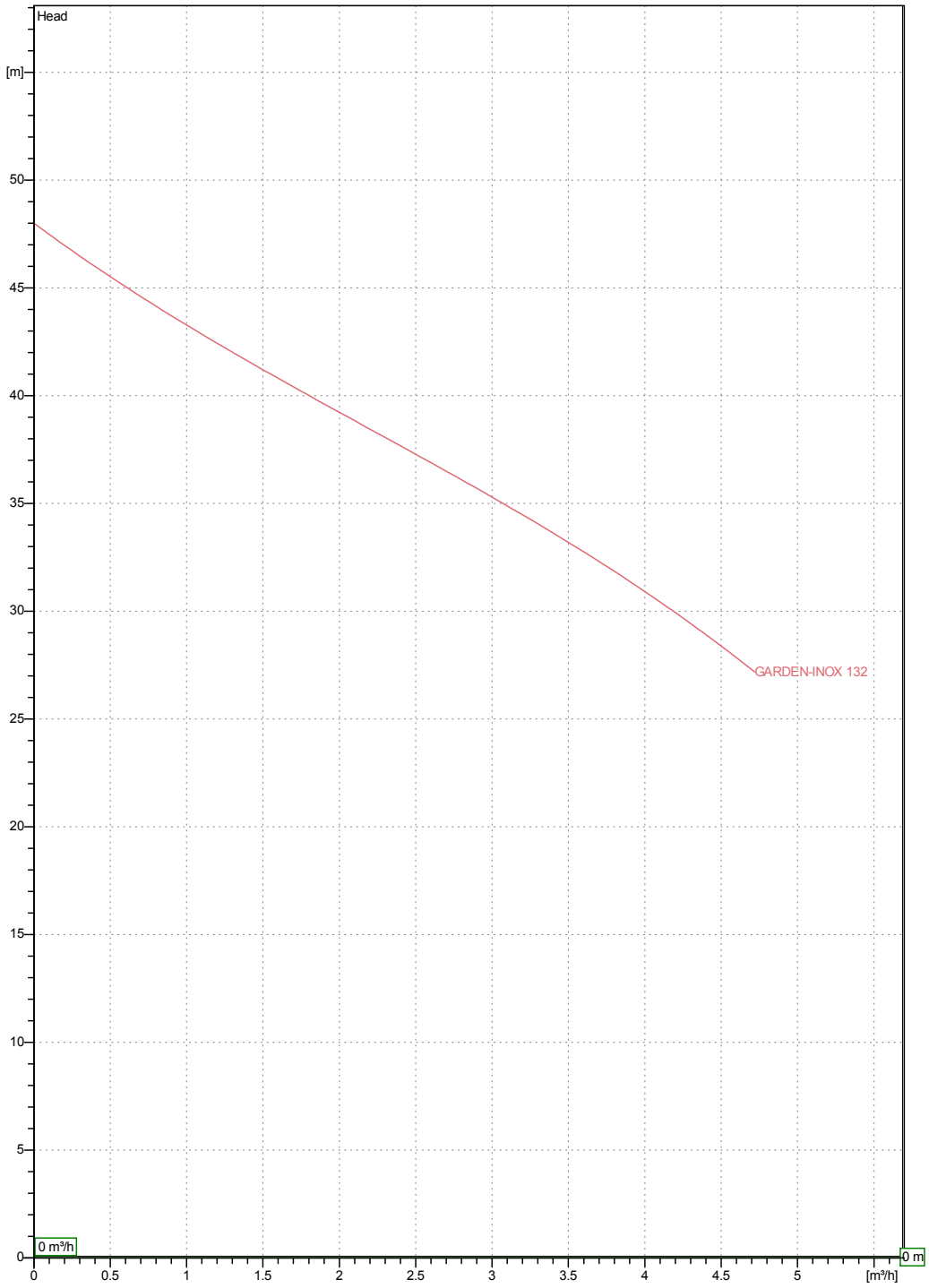

Hydraulic data (duty point)

Suction side :	Discharge side :	Flow :	Head :	Rated speed :
1 " G 8 bar (800 kPa)	1 " G 8 bar (800 kPa)	0 m³/h	0 m	2850 rpm

Project	Project ID	Created by	Created on
			24/03/2016

DAB PUMPS reserves the right to make modifications without notice

DIMENSIONAL DRAWING

24/03/2016

Receiver	From
Society Reference Address Phone Fax E-mail	

GARDEN-INOX 132 M

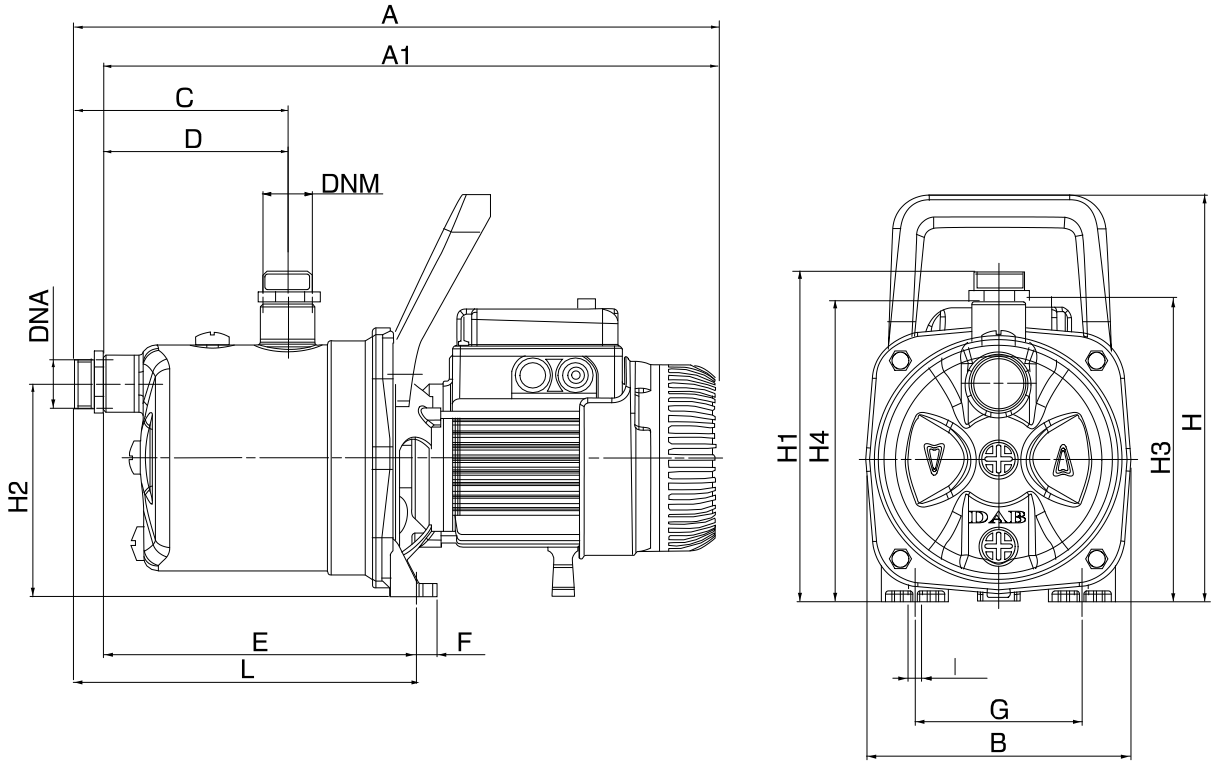

Dimensions in mm							Pump connection
1	A	444	H	268			
2	A1	424	H1	216			Suction
3	B	174	H2	144			1 " G
4	C	142	H3	209			8 bar (800 kPa)
5	D	122	H4	197			
6	DNA	1" G	I	9			Discharge
7	DNM	1" G	L	227			1 " G
8	E	207					8 bar (800 kPa)
9	F	14					
10	G	111					

Project	Project ID	Created by	Created on
			24/03/2016

DAB PUMPS reserves the right to make modifications without notice