DATA SHEET

24/03/2016

Receiver

Society
Reference
Address
Phone
Fax
E-mail

From

Item n° :

102160092

Model :

JET 251 M

Pump data

Pressure rating :	8 bar (800 kPa)
Min. fluid temperature :	0 °C
Max. fluid temperature :	35 °C
Max. Ambient temperature :	40 °C

Priming capacity :

H m	2	3	4	5	6	7	8
Q m³/h	6.3	5.52	4.92	4.32	3.72	3.3	2.46

Requested data

Flow :	0.00 m³/h
Head :	0.00 m
Fluid :	Water, pure
Fluid Temperature :	20 °C
Density :	998.3 kg/m³
Kinematic viscosity :	1.005 mm²/s
Vapor pressure :	100.00 kPa

Hydraulic data (duty point)

Flow :

Head :

Materials

Pump body	Cast iron GJL 200 UNI EN 1561
Support	Cast iron GJL 200 UNI EN 1561
Impeller	Noryl
Mechanical seal	Carbon/Ceramic
OR ring	NBR Rubber
Shaft with rotor	AISI 303
Nozzle venturi diffuser assembly	Noryl

Curve tolerance according to ISO 9906

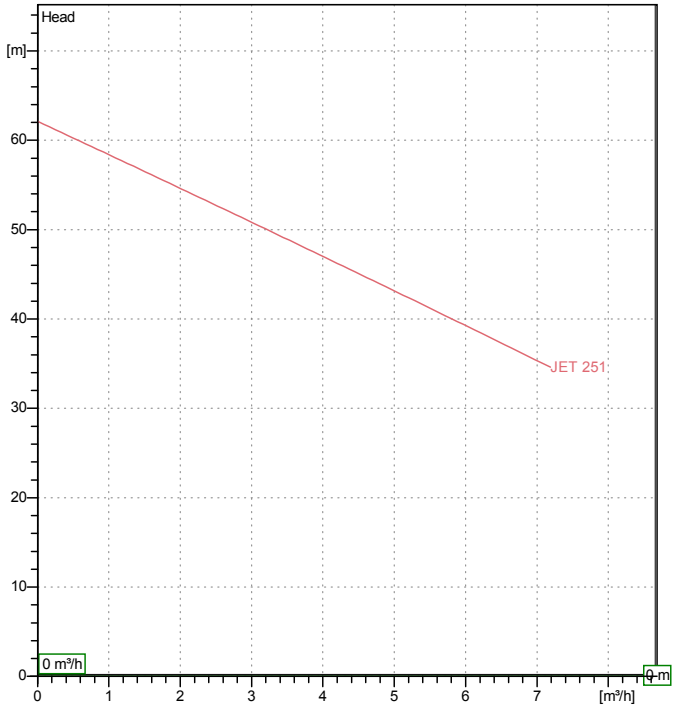

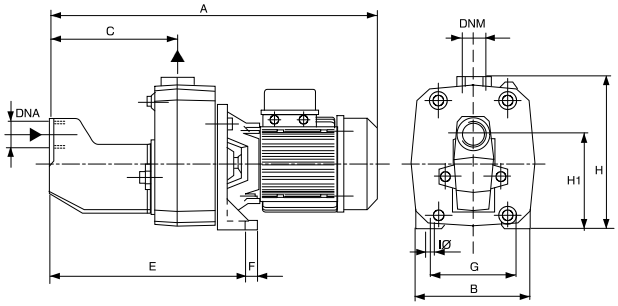

Motor data

Motor brand :	DAB		
Nominal power P2 :	1.85 kW		
Rated speed :	2800 rpm		
Rated voltage :	1~	220-240 V	50 Hz
Nominal current :	10 A		
Degree of protection :	IP 44		

Dimensions in mm

A	632	DNM	1" G	H	255		
B	210	E	350	H1	158		
C	221	F	20	I Ø	11		
DNA	1"1/4 G	G	145				

Weight : 35 kg

Pump connection

Suction side :	1 " 1/4 G/ 8 bar (800 kPa)
Discharge side :	1 " G / 8 bar (800 kPa)

DAB PUMPS reserves the right to make modifications without notice

PERFORMANCE CURVES

24/03/2016

Receiver	From
Society Reference Address Phone Fax E-mail	

JET 251 M

Curve tolerance according to ISO 9906

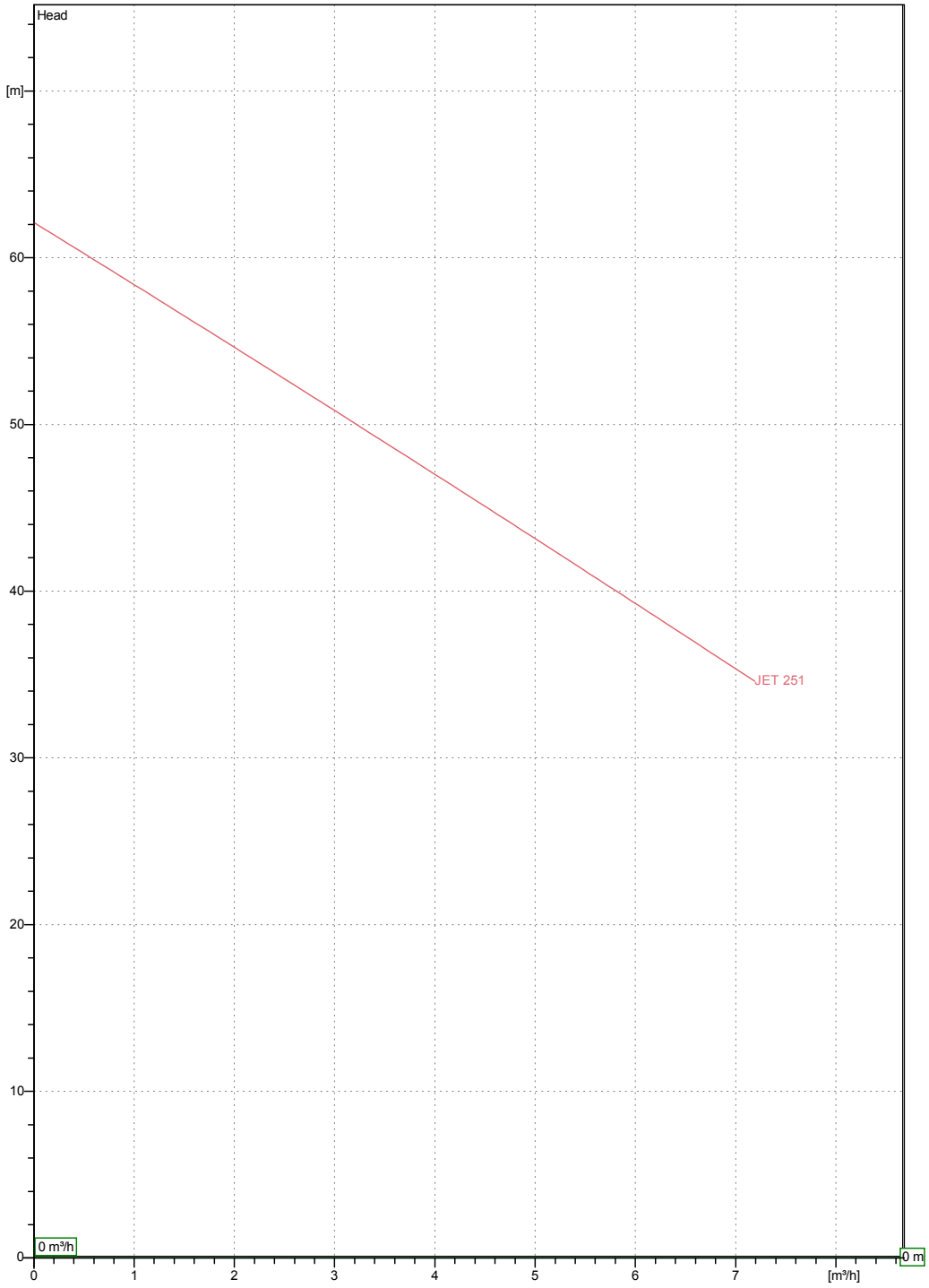

Hydraulic data (duty point)

Suction side :	Discharge side :	Flow :	Head :	Rated speed :
1 " 1/4 G 8 bar (800 kPa)	1 " G 8 bar (800 kPa)	0 m³/h	0 m	2800 rpm

Project	Project ID	Created by	Created on
			24/03/2016

DAB PUMPS reserves the right to make modifications without notice

DIMENSIONAL DRAWING

24/03/2016

Receiver	From
Society Reference Address Phone Fax E-mail	

JET 251 M

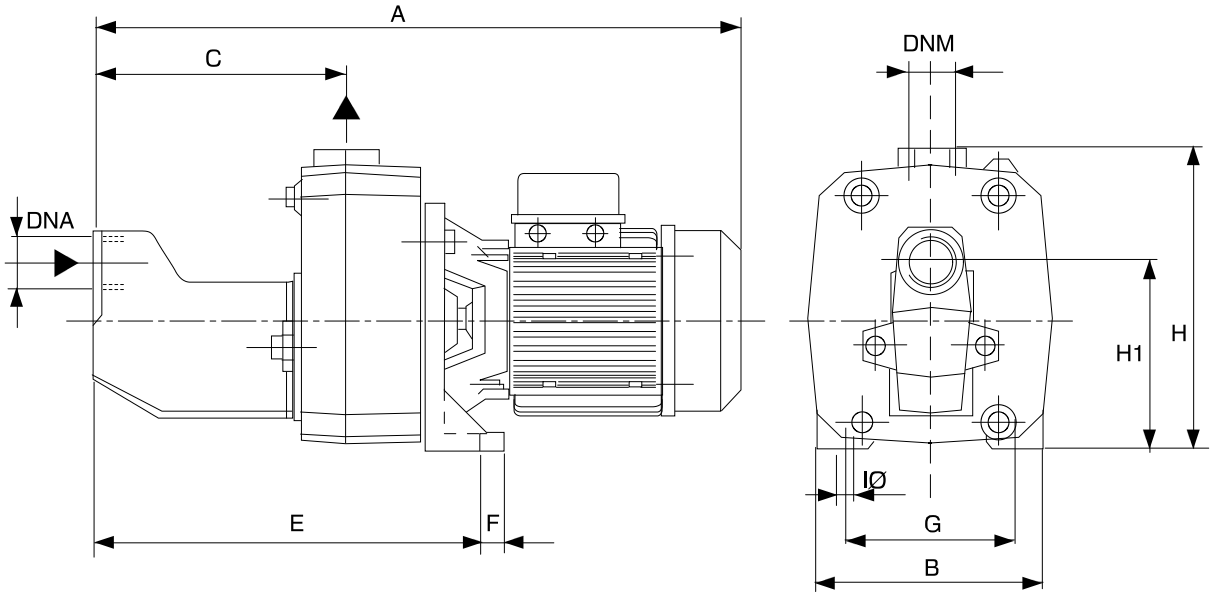

Dimensions in mm							Pump connection
1	A	632	I Ø	11			
2	B	210					Suction
3	C	221					1 " 1/4 G
4	DNA	1"1/4 G					8 bar (800 kPa)
5	DNM	1" G					
6	E	350					Discharge
7	F	20					1 " G
8	G	145					8 bar (800 kPa)
9	H	255					
10	H1	158					

Project	Project ID	Created by	Created on
			24/03/2016

DAB PUMPS reserves the right to make modifications without notice