DATA SHEET

24/03/2016

Receiver

Society
Reference
Address
Phone
Fax
E-mail

From

Item n° :

102160162

Model :

JET 300 M

Pump data

Pressure rating :	8 bar (800 kPa)
Min. fluid temperature :	0 °C
Max. fluid temperature :	35 °C
Max. Ambient temperature :	40 °C

Priming capacity :

H m	2	3	4	5	6	7	8
Q m³/h	9.48	9.18	8.1	7.08	6	4.5	3.36

Requested data

Flow :	0.00 m³/h
Head :	0.00 m
Fluid :	Water, pure
Fluid Temperature :	20 °C
Density :	998.3 kg/m³
Kinematic viscosity :	1.005 mm²/s
Vapor pressure :	100.00 kPa

Hydraulic data (duty point)

Flow :

Head :

Materials

Pump body	Cast iron GJL 200 UNI EN 1561
Support	Cast iron GJL 200 UNI EN 1561
Impeller	Noryl
Mechanical seal	Carbon/Ceramic
OR ring	NBR Rubber
Shaft with rotor	AISI 303
Nozzle venturi diffuser assembly	Noryl

Curve tolerance according to ISO 9906

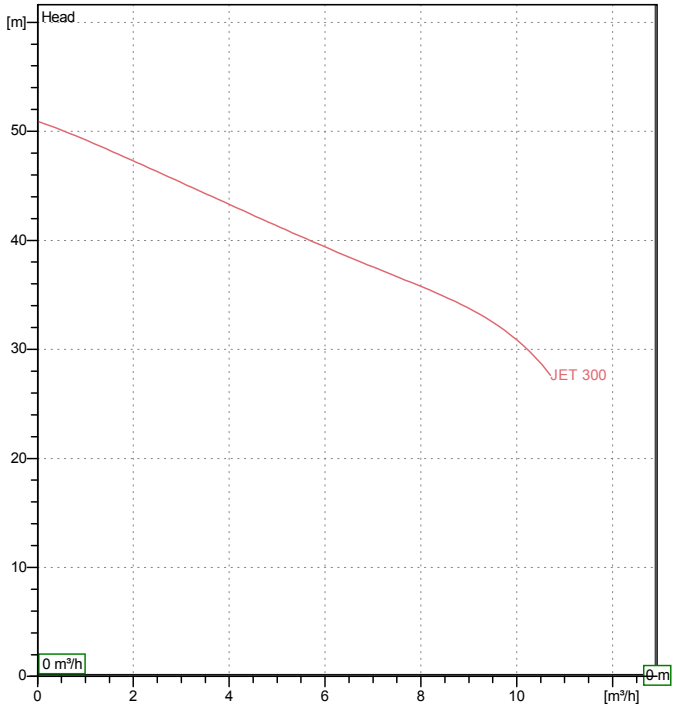

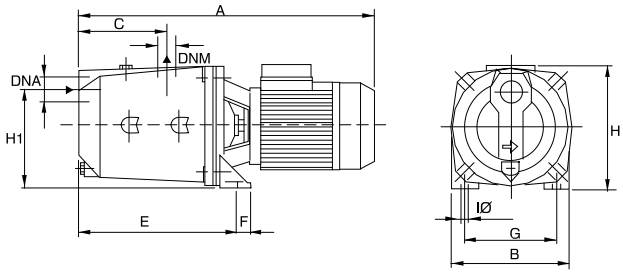

Motor data

Motor brand :	DAB	
Nominal power P2 :	2.2 kW	
Rated speed :	2850 rpm	
Rated voltage :	1~ 230 V	50 Hz
Nominal current :	12 A	
Degree of protection :	IP 44	

Dimensions in mm

A	595	DNM	1"1/4 G	H	235		
B	214	E	282	H1	175		
C	151	F	20	IØ	11		
DNA	1"1/2 G	G	160				

Weight : 31.5 kg

Pump connection

Suction side :	1 " 1/2 G/ 8 bar (800 kPa)
Discharge side :	1 " 1/4 G/ 8 bar (800 kPa)

DAB PUMPS reserves the right to make modifications without notice

PERFORMANCE CURVES

24/03/2016

Receiver	From
Society Reference Address Phone Fax E-mail	

JET 300 M

Curve tolerance according to ISO 9906

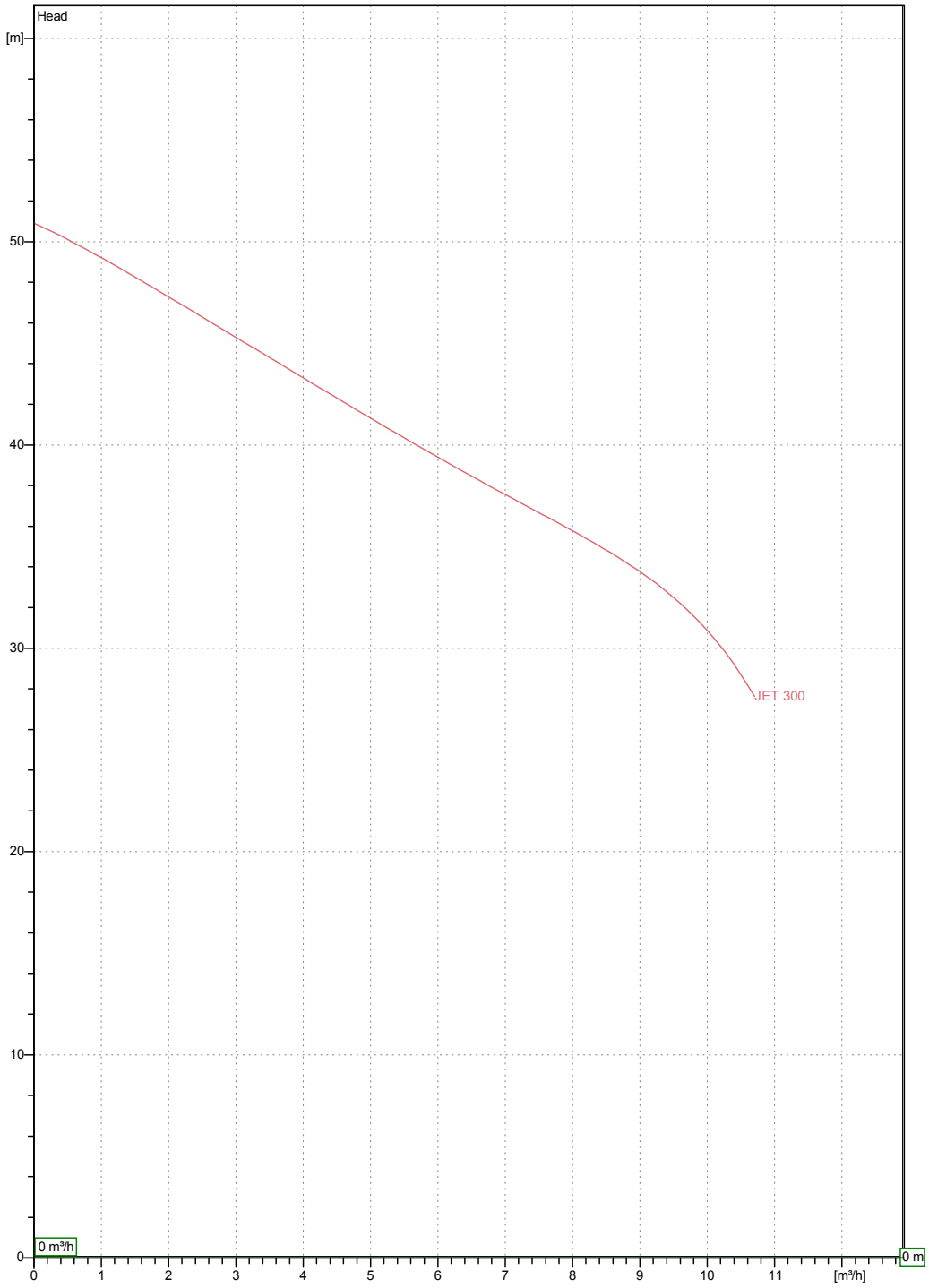

Hydraulic data (duty point)

Suction side :	Discharge side :	Flow :	Head :	Rated speed :
1 " 1/2 G 8 bar (800 kPa)	1 " 1/4 G 8 bar (800 kPa)	0 m³/h	0 m	2850 rpm

Project	Project ID	Created by	Created on
			24/03/2016

DAB PUMPS reserves the right to make modifications without notice

DIMENSIONAL DRAWING

24/03/2016

Receiver	From
Society Reference Address Phone Fax E-mail	

JET 300 M

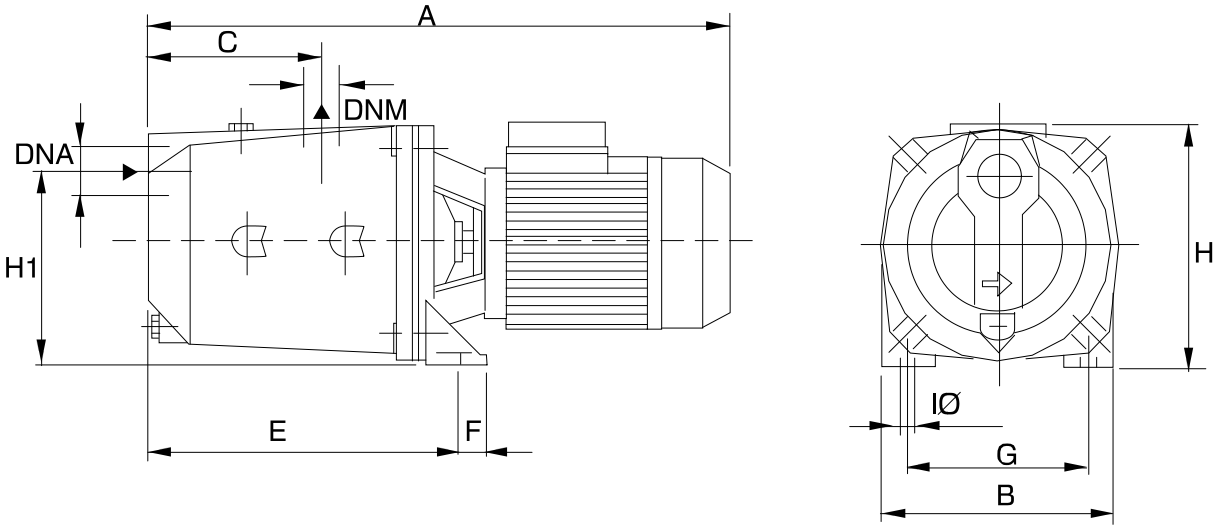

Dimensions in mm							Pump connection
1	A	595	I Ø	11			
2	B	214					Suction
3	C	151					1 " 1/2 G
4	DNA	1"1/2 G					8 bar (800 kPa)
5	DNM	1"1/4 G					
6	E	282					Discharge
7	F	20					1 " 1/4 G
8	G	160					8 bar (800 kPa)
9	H	235					
10	H1	175					

Project	Project ID	Created by	Created on
			24/03/2016

DAB PUMPS reserves the right to make modifications without notice