MODEL B180 E

Edizione 2010
Rev. A

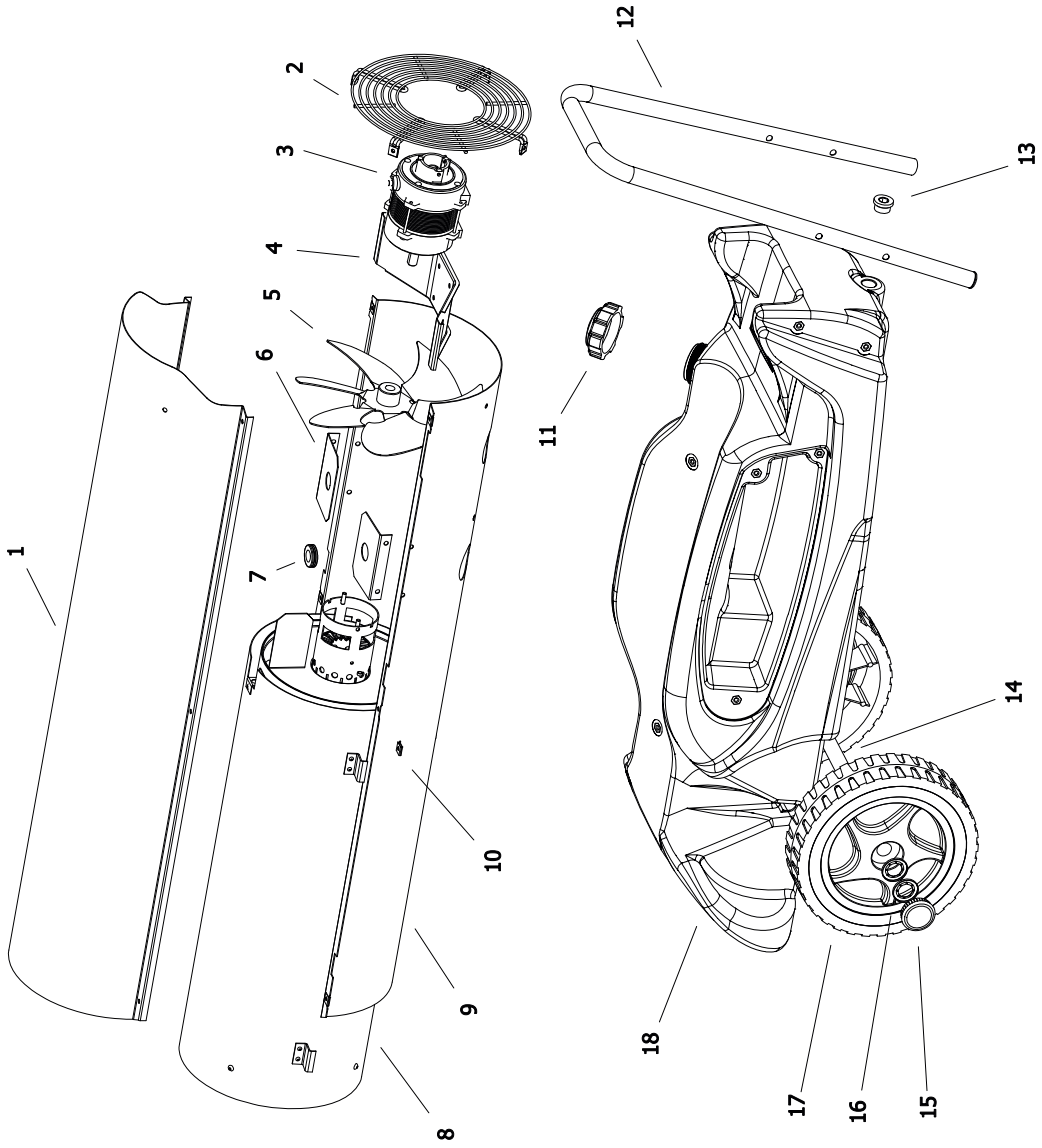

MODEL B180 E

Edizione 2010
Rev. A

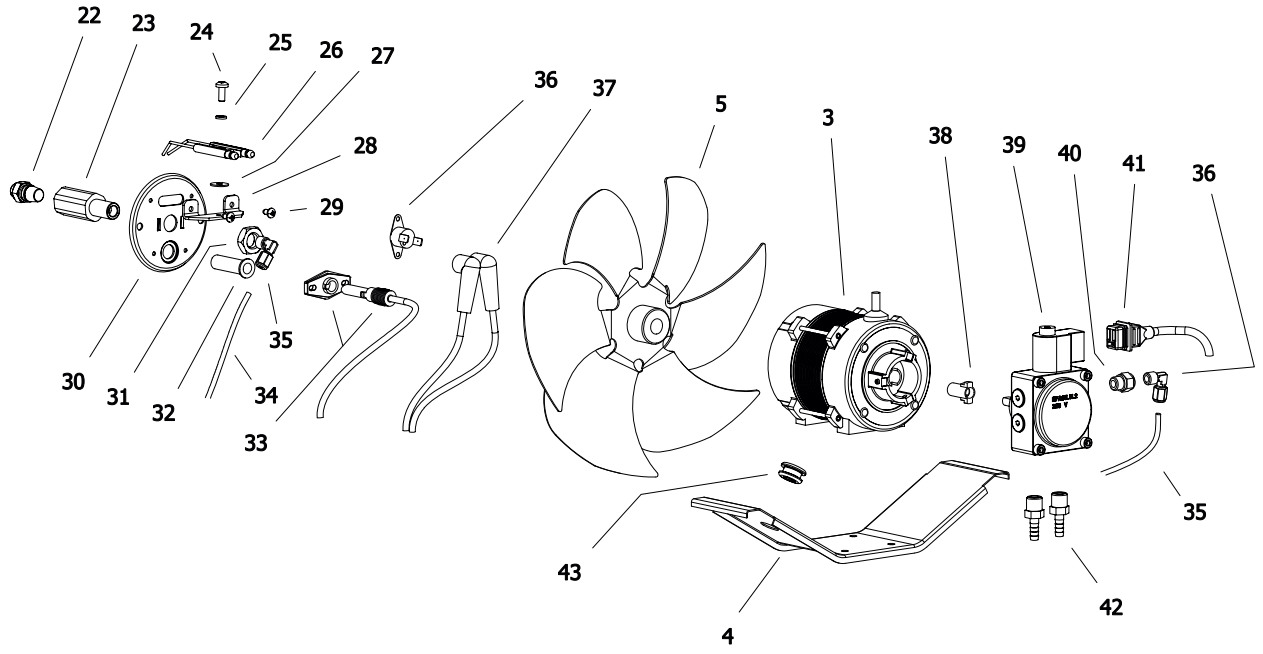

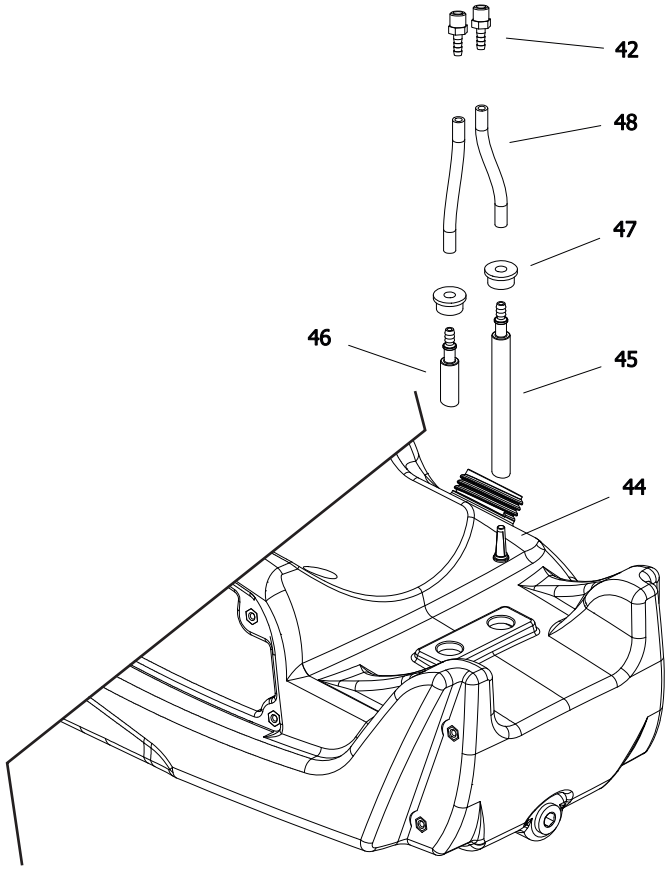

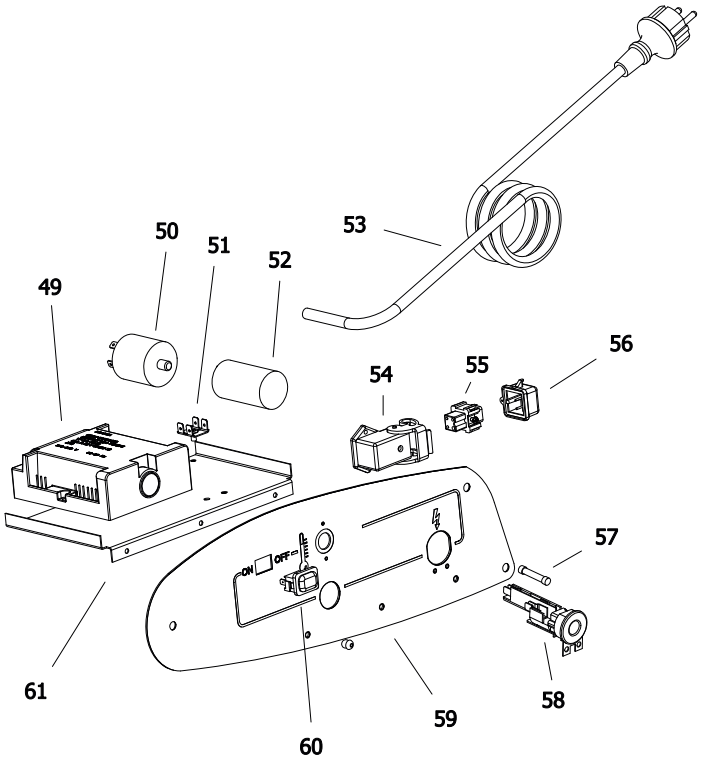

MODEL B 180

Pos.	Code NR	Description
1	S/R	UPPER SHELL
2	4032.836	GRID
3	4032.815	MOTOR
4	4032.835	MOTOR BRACKET
5	4032.814	FAN
6	4033.028	AIR FLAP
7	4160.646	CABLE PROTECTION
8	4032.993	COMBUSTION CHAMBER
9	S/R	LOWER SHELL
10	4104.170	CLIP NUT
11	4032.846	FUEL TANK CAP
12	4032.811	HANDLES
13	4032.813	DRAIN PLUG
14	4032.809	AXLE
15	4111.480	WHEEL PLUG
16	4111.072	WHEEL HOLDER
17	4032.094	WHEEL
18	4033.037	TANK
22	4031.163	NOZZLE
23	4032.786	NOZZLE SUPPORT
24	4160.601	SCREW
25	4110.393	WASHER
26	4032.396	BIFILAR ELECTRODE
27	4110.394	WASHER
28	4032.398	ELECTRODE BRACKET
29	4161.434	SCREW 4,2X9,5
30	4032.397	BURNER FLANGE
31	4032.407	NUT M14X6
32	4032.406	PHOTOCELL SUPPORT
33	4033.022	PHOTOCELL
34	4032.854	OIL SUPPLY PIPE
35	4161.140	ELBOW
36	4032.883	LIMIT THERMOSTAT
37	4032.885	HT CABLE
38	4111.081	COUPLING
39	4032.789	PUMP
40	4161.501	NIPPLES
41	4032.905	POWER CORD SOLENOID SPOOL
42	4032.906	FITTING 1/4"

MODEL B 180

Pos.	Code NR	Description
43	4032.947	CABLE PROTECTION
44	4110.356	FUEL FILTER
45	4110.355	FUEL LINE TANK-PUMP
46	4033.038	FUEL PIPE PUMP-TANK
47	4100.541	RUBBER BUSHING
48	4110.032	FUEL LINE
49	4033.017	IGNITION CONTROL ASSEMBLY
50	4032.771	POWER LINE RFI FILTER
51	4160.639	POP RIVET WITH TERMIN. 4 WAY
52	4032.816	CAPACITOR 6,3 µf
53	4111.153	POWER CORD
54	4111.119	THERMOSTAT SOCKET
56	4162.467	CAP FOR THERMOSTAT SOCKET
57	4032.850	FUSE (6,3X32) 15A
58	4111.038	STRAIN RELIEF
59	4032.823	ELECTR. COMPONENTS PANEL
60	4100.667	ON/OFF SWITCH
61	4032.897	ELECTR. COMPONENTS BASE

S/R – parts on special request only

B 180 2011 MODEL

From Serial Number: 30803707

Edizione 2011
Rev. A

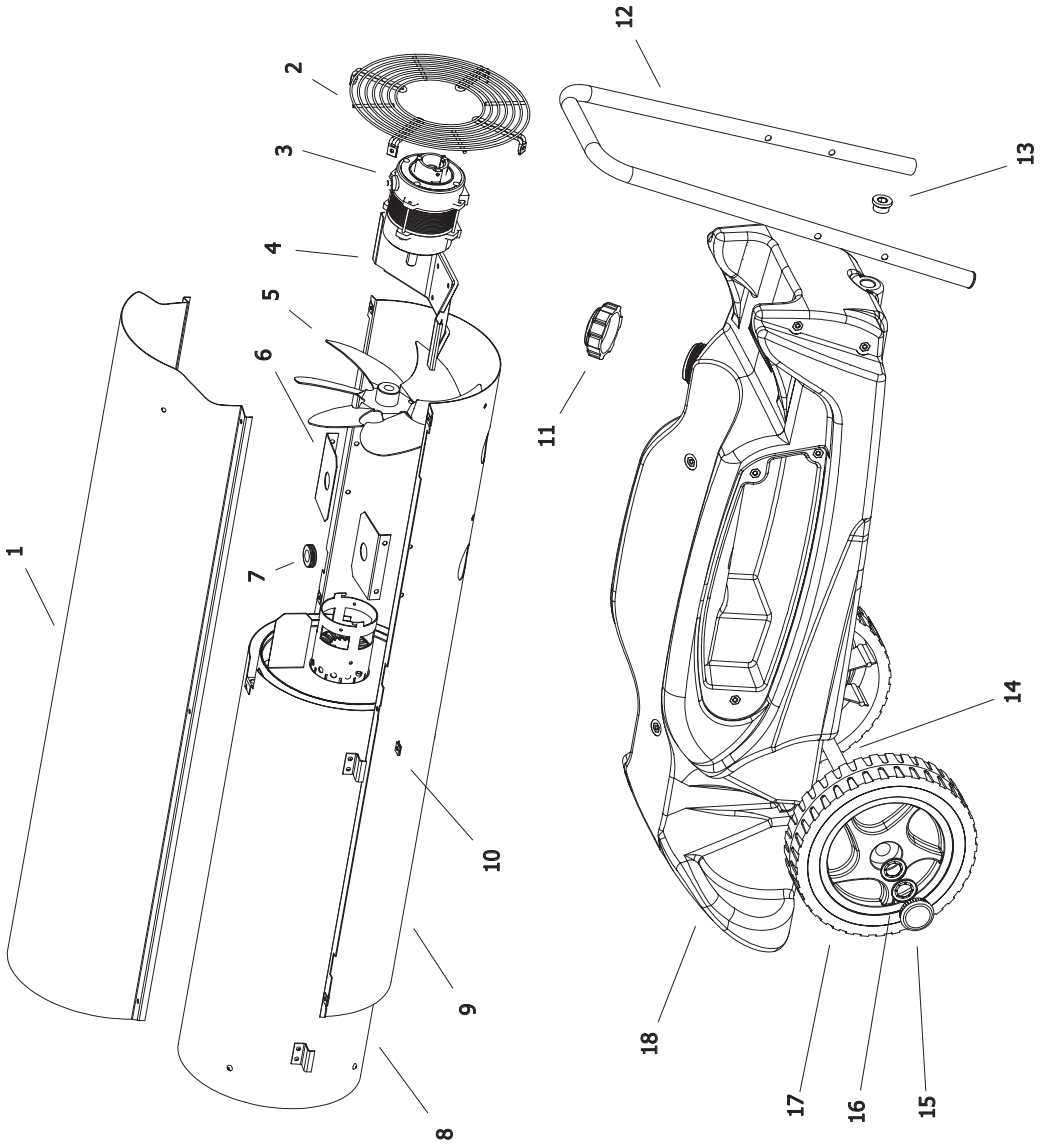

B 180 2011 MODEL

From Serial Number: 30803707

Edizione 2011
Rev. A

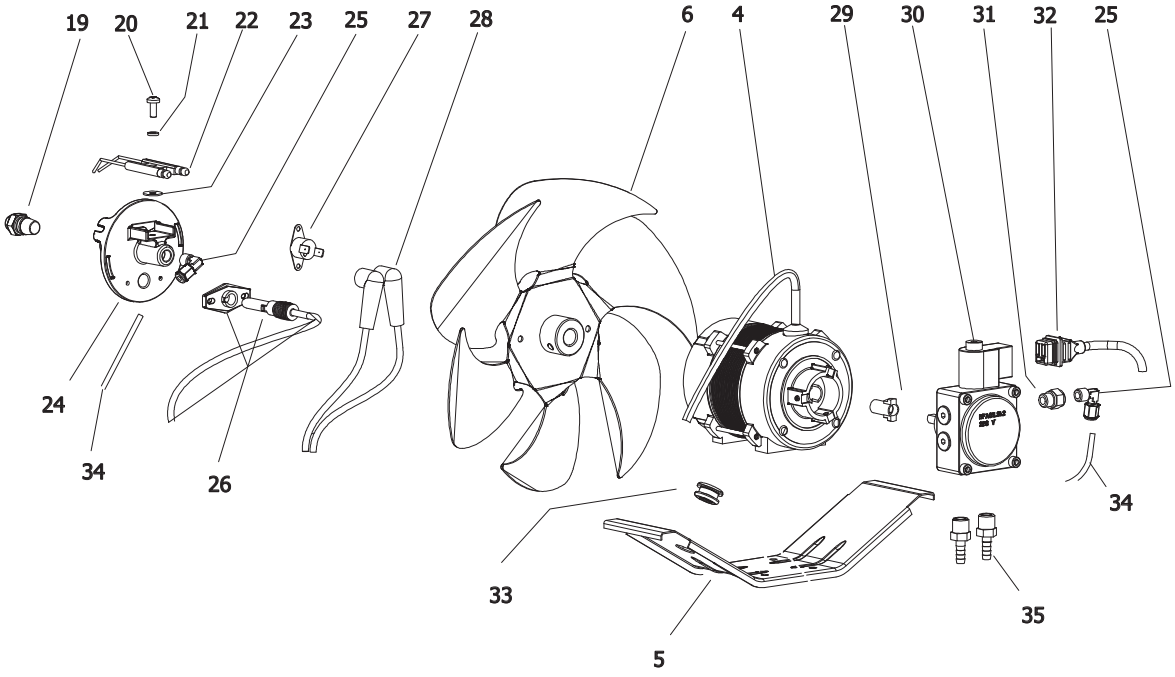

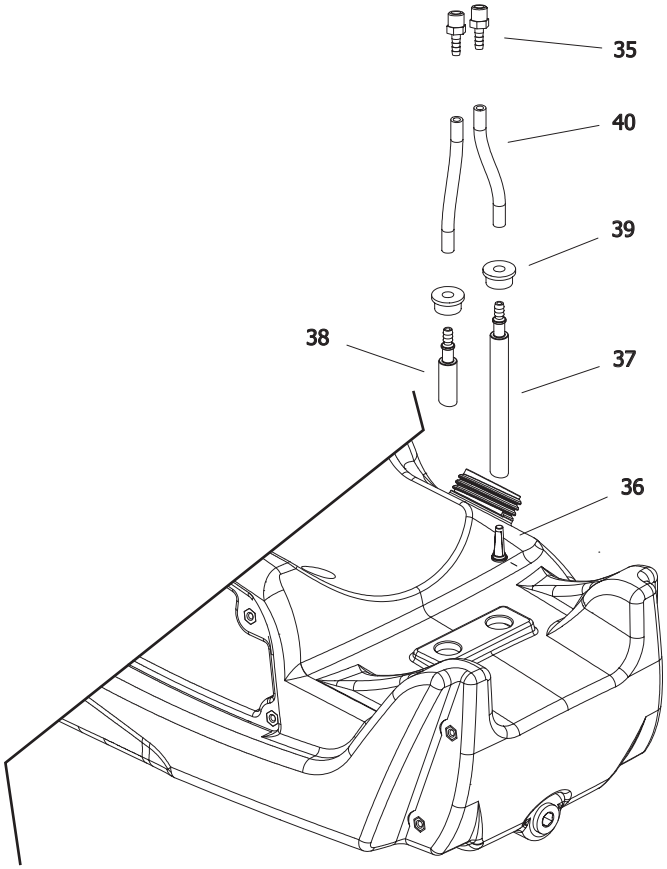

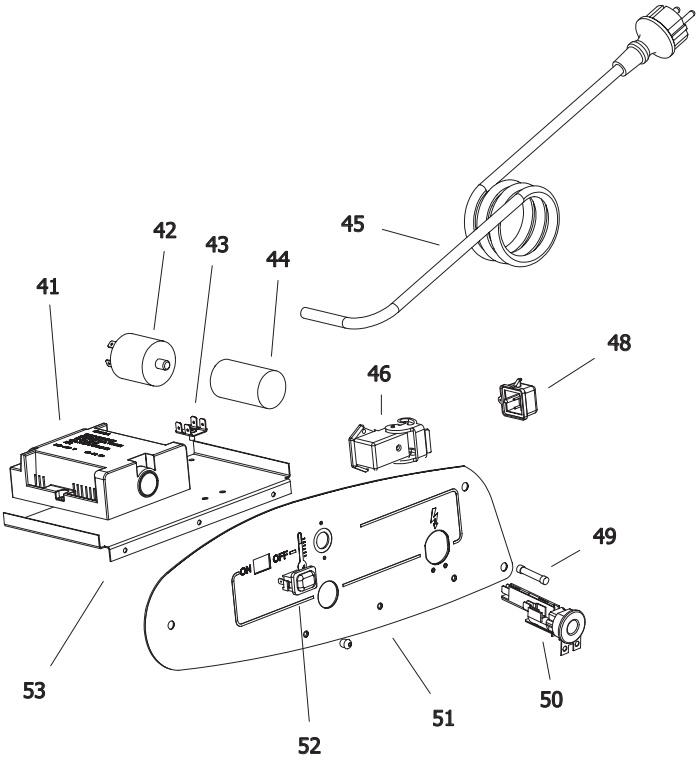

Pos.	Code NR	Description
1	4033.016	UPPER SHELL
2	4032.836	GRID
3	4032.815	MOTOR
4	4032.835	MOTOR BRACKET
5	4032.814	FAN
6	4033.028	AIR FLAP
7	4160.646	CABLE PROTECTION
8	4033.132	COMBUSTION CHAMBER
9	4033.015	LOWER SHELL
10	4104.170	CLIP NUT
11	4032.846	FUEL TANK CAP
12	4032.811	HANDLES
13	4032.813	DRAIN PLUG
14	4032.809	AXLE
15	4111.480	WHEEL PLUG
16	4111.072	WHEEL HOLDER
17	4032.094	WHEEL
18	4033.037	TANK
19	4031.163	NOZZLE
20	4160.601	SCREW
21	4110.393	WASHER
22	4032.396	BIFILAR ELECTRODE
23	4110.394	WASHER
24	4033.042	BURNER FLANGE
25	4161.140	ELBOW
26	4033.022	PHOTOCELL
27	4032.883	LIMIT THERMOSTAT
28	4032.885	HT CABLE
29	4111.081	COUPLING
30	4032.789	PUMP
31	4161.501	NIPPLES
32	4032.905	POWER CORD SOLENOID SPOOL
33	4032.947	CABLE PROTECTION

Pos.	Code NR	Description
34	4032.854	OIL SUPPLY PIPE
35	4032.906	FITTING 1/4"
36	4110.356	FUEL FILTER
37	4110.355	FUEL LINE TANK-PUMP
38	4033.038	FUEL PIPE PUMP-TANK
39	4100.541	RUBBER BUSHING
40	4110.032	FUEL LINE
41	4033.017	IGNITION CONTROL ASSEMBLY
42	4032.771	POWER LINE RFI FILTER
43	4160.639	POP RIVET WITH TERMIN. 4 WAY
44	4032.816	CAPACITOR 6,3 µf
45	4111.153	POWER CORD
46	4111.119	THERMOSTAT SOCKET
48	4162.467	CAP FOR THERMOSTAT SOCKET
49	4032.850	FUSE (6,3X32) 15A
50	4111.038	STRAIN RELIEF
51	4032.823	ELECTR. COMPONENTS PANEL
52	4100.667	ON/OFF SWITCH
53	4032.897	ELECTR. COMPONENTS BASE

B 180 MODEL 2012

From Serial Number: 32800180

Edizione 2012
Rev. A

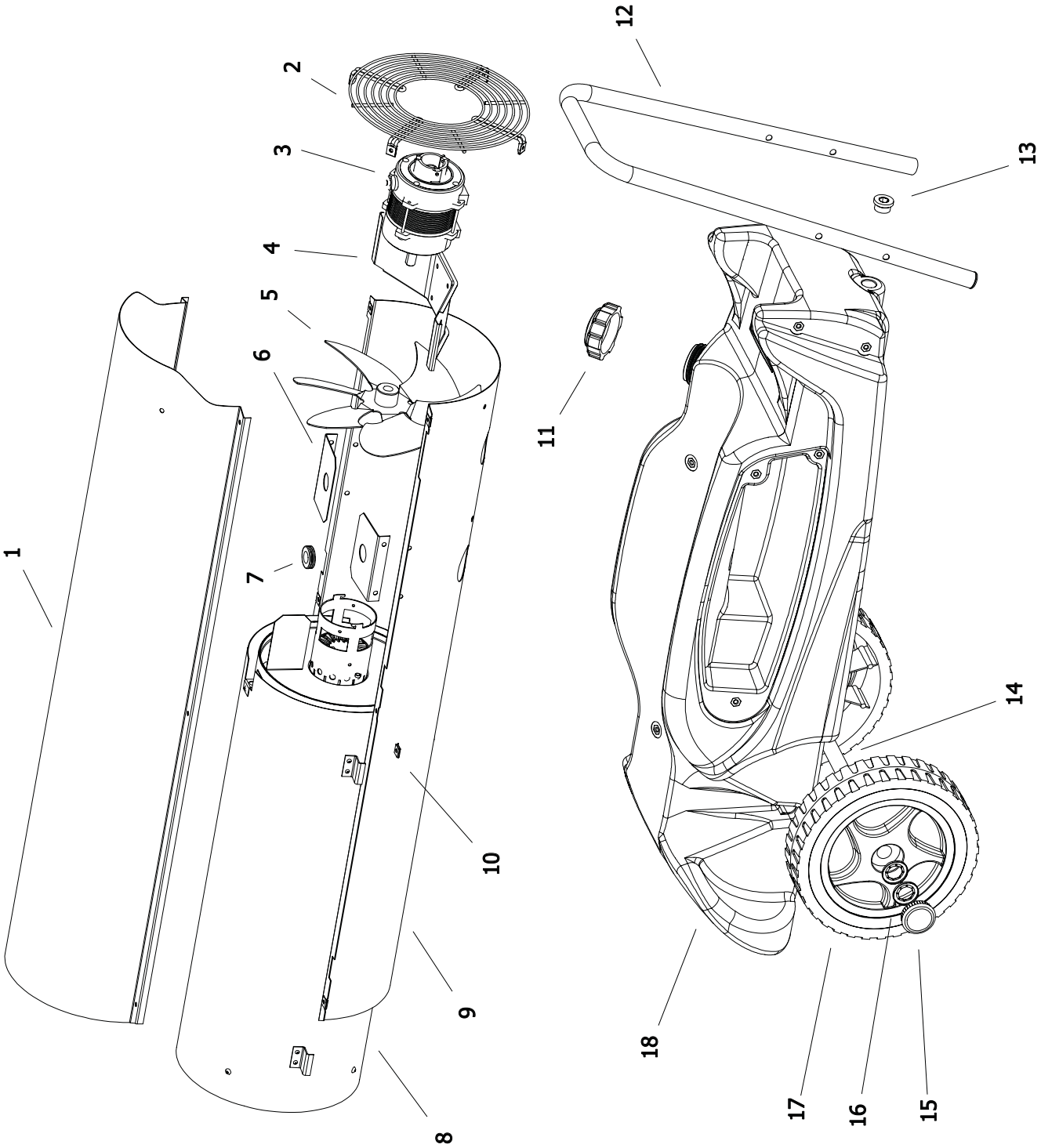

B 180 MODEL 2012

From Serial Number: 32800180

Rev. A - May 2012

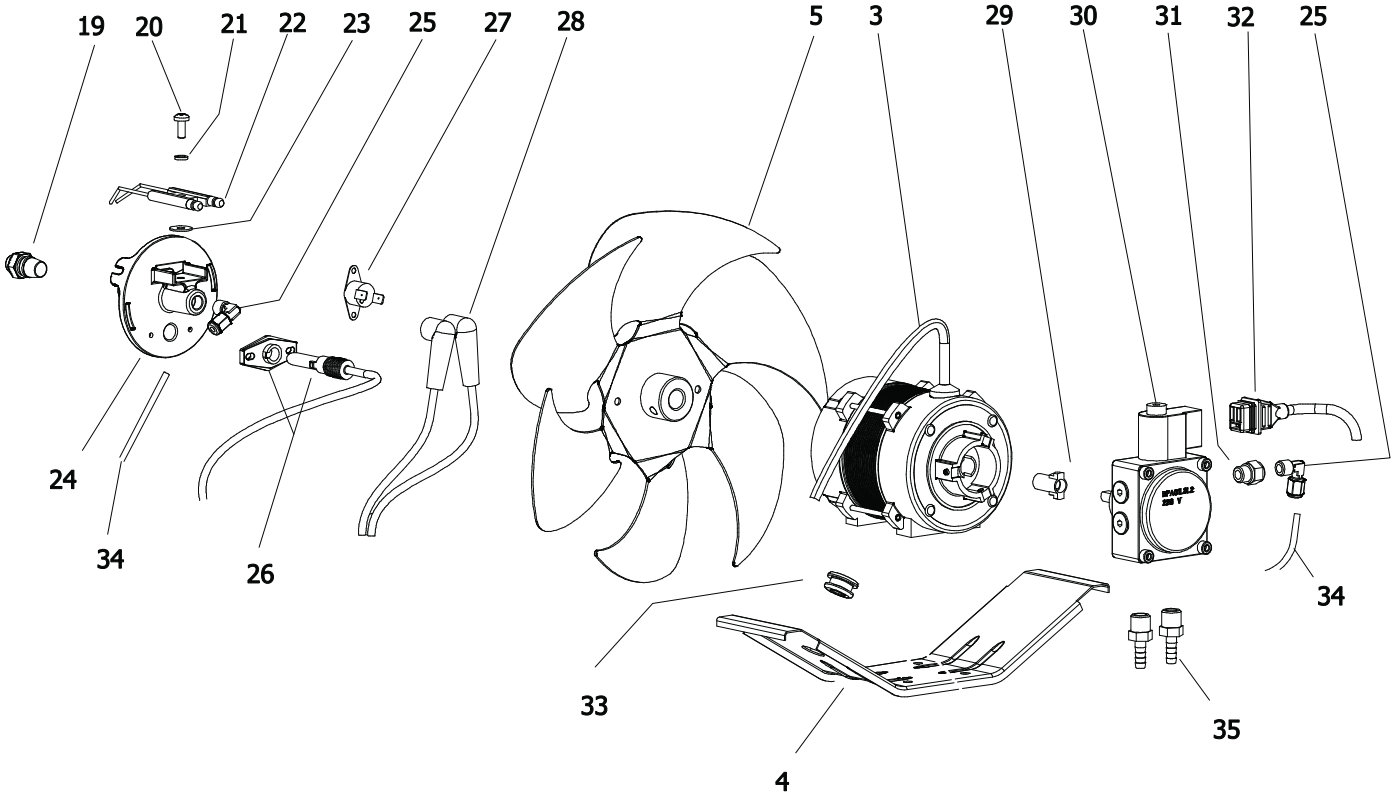

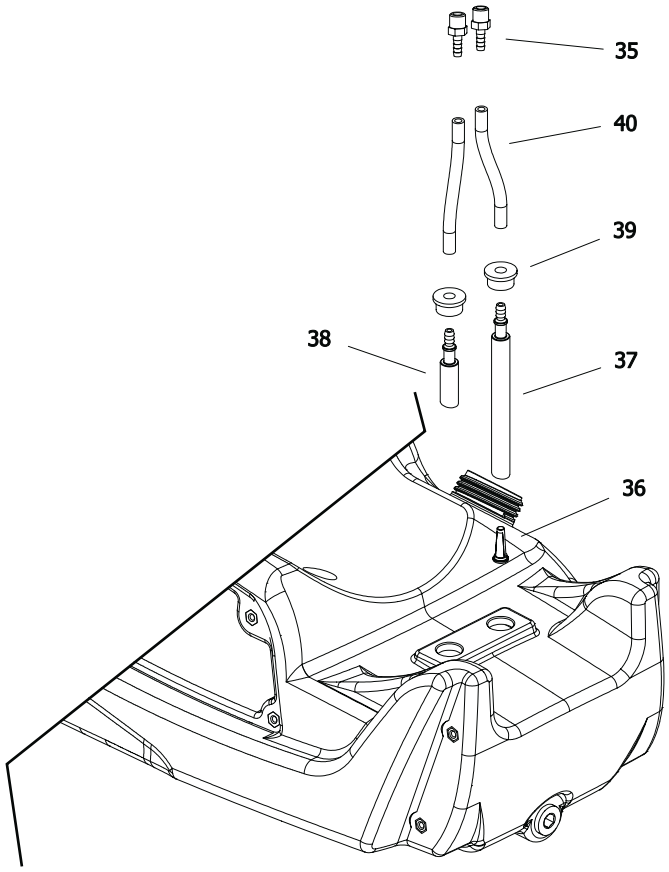

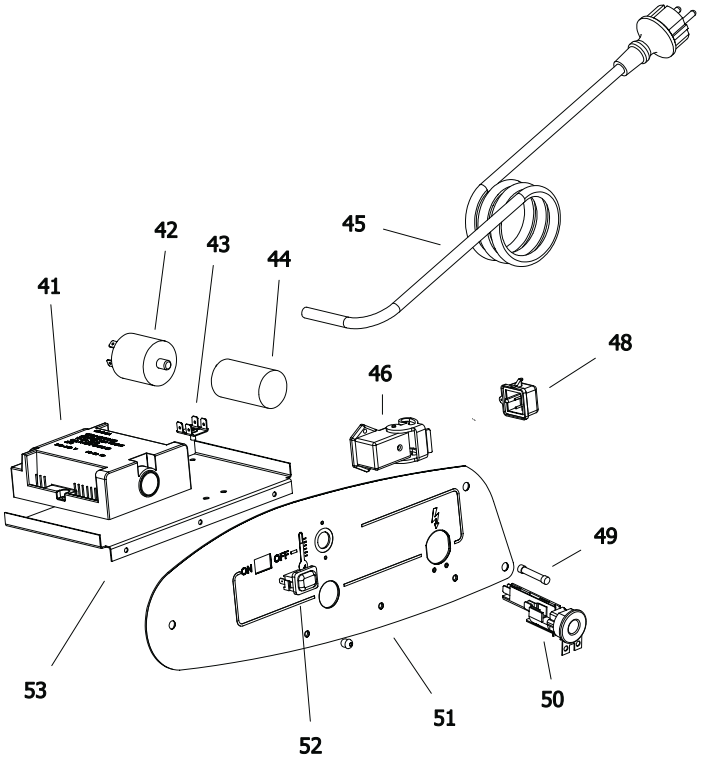

Pos.	Code NR	Description
1	4033.016	UPPER SHELL
2	4032.836	GRID
3	4032.815	MOTOR
4	4032.835	MOTOR BRACKET
5	4032.814	FAN
6	4033.028	AIR FLAP
7	4160.646	CABLE PROTECTION
8	4033.132	COMBUSTION CHAMBER
9	4033.015	LOWER SHELL
10	4104.170	CLIP NUT
11	4032.846	FUEL TANK CAP
12	4032.811	HANDLES
13	4032.813	DRAIN PLUG
14	4032.809	AXLE
15	4111.480	WHEEL PLUG
16	4111.072	WHEEL HOLDER
17	4032.094	WHEEL
18	4033.037	TANK
19	4031.163	NOZZLE
20	4160.601	SCREW
21	4110.393	WASHER
22	4033.123	BIFILAR ELECTRODE
23	4110.394	WASHER
24	4033.042	BURNER FLANGE
25	4033.198	ELBOW
26	4033.022	PHOTOCELL
27	4032.883	LIMIT THERMOSTAT
28	4032.885	HT CABLE
29	4111.081	COUPLING
30	4032.789	PUMP
31	4161.501	NIPPLES
32	4032.905	POWER CORD SOLENOID SPOOL
33	4032.947	CABLE PROTECTION

Pos.	Code NR	Description
34	4033.187	OIL SUPPLY PIPE
35	4032.906	FITTING 1/4"
36	4110.356	FUEL FILTER
37	4110.355	FUEL LINE TANK-PUMP
38	4033.038	FUEL PIPE PUMP-TANK
39	4100.541	RUBBER BUSHING
40	4110.032	FUEL LINE
41	4033.017	IGNITION CONTROL ASSEMBLY
42	4032.771	POWER LINE RFI FILTER
43	4160.639	POP RIVET WITH TERMIN. 4 WAY
44	4032.816	CAPACITOR 6,3 µf
45	4111.153	POWER CORD
46	4111.119	THERMOSTA SOCKET
48	4162.467	CAP FOR THERMOSTAT SOCKET
49	4032.850	FUSE (6,3X32) 15A
50	4111.038	STRAIN RELIEF
51	4032.823	ELECTR. COMPONENTS PANEL
52	4100.667	ON/OFF SWITCH
53	4032.897	ELECTR. COMPONENTS BASE

B 180 MODEL 2013

From Serial Number: 04233000449

Edizione 2013
Rev. A

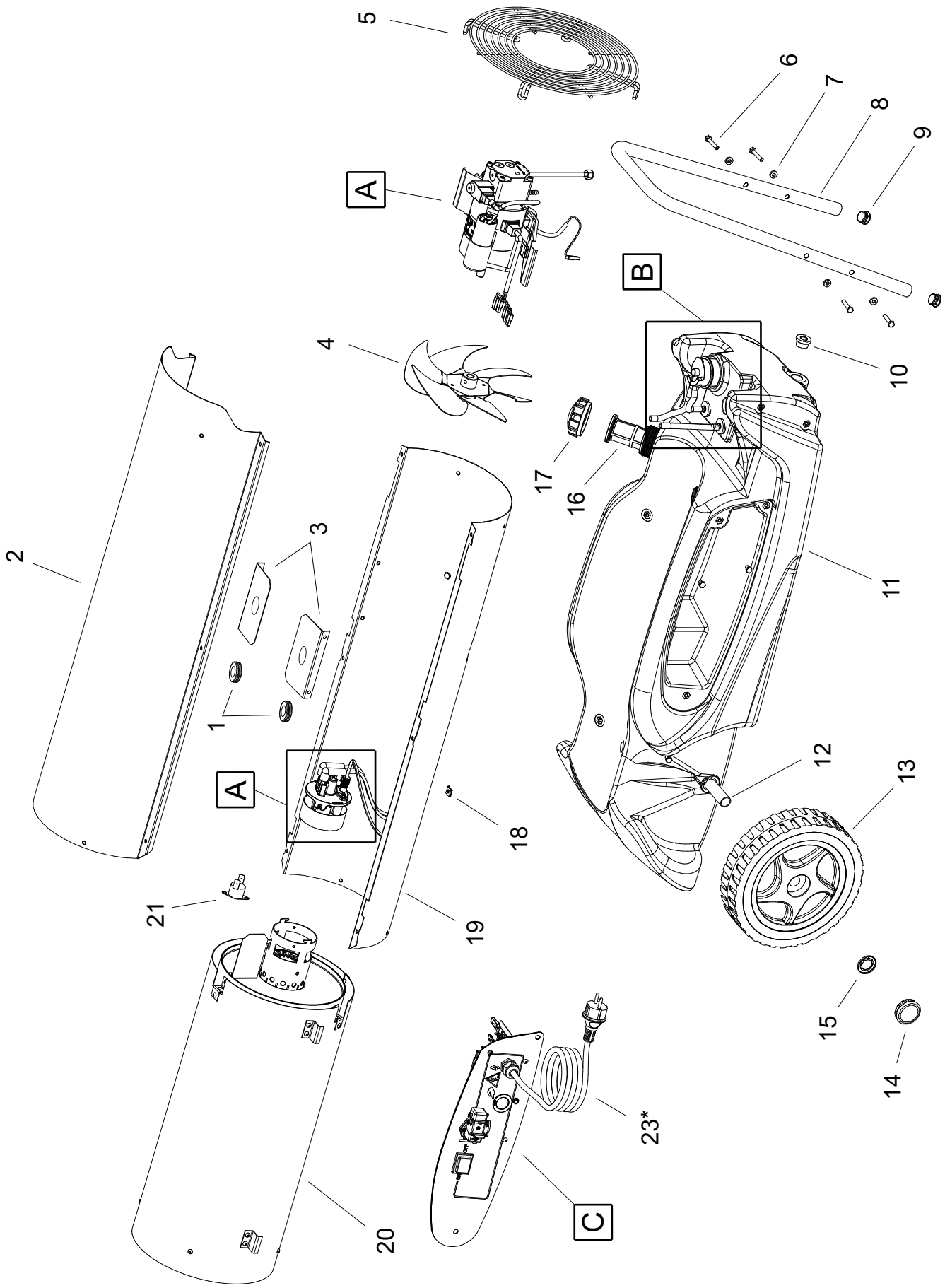

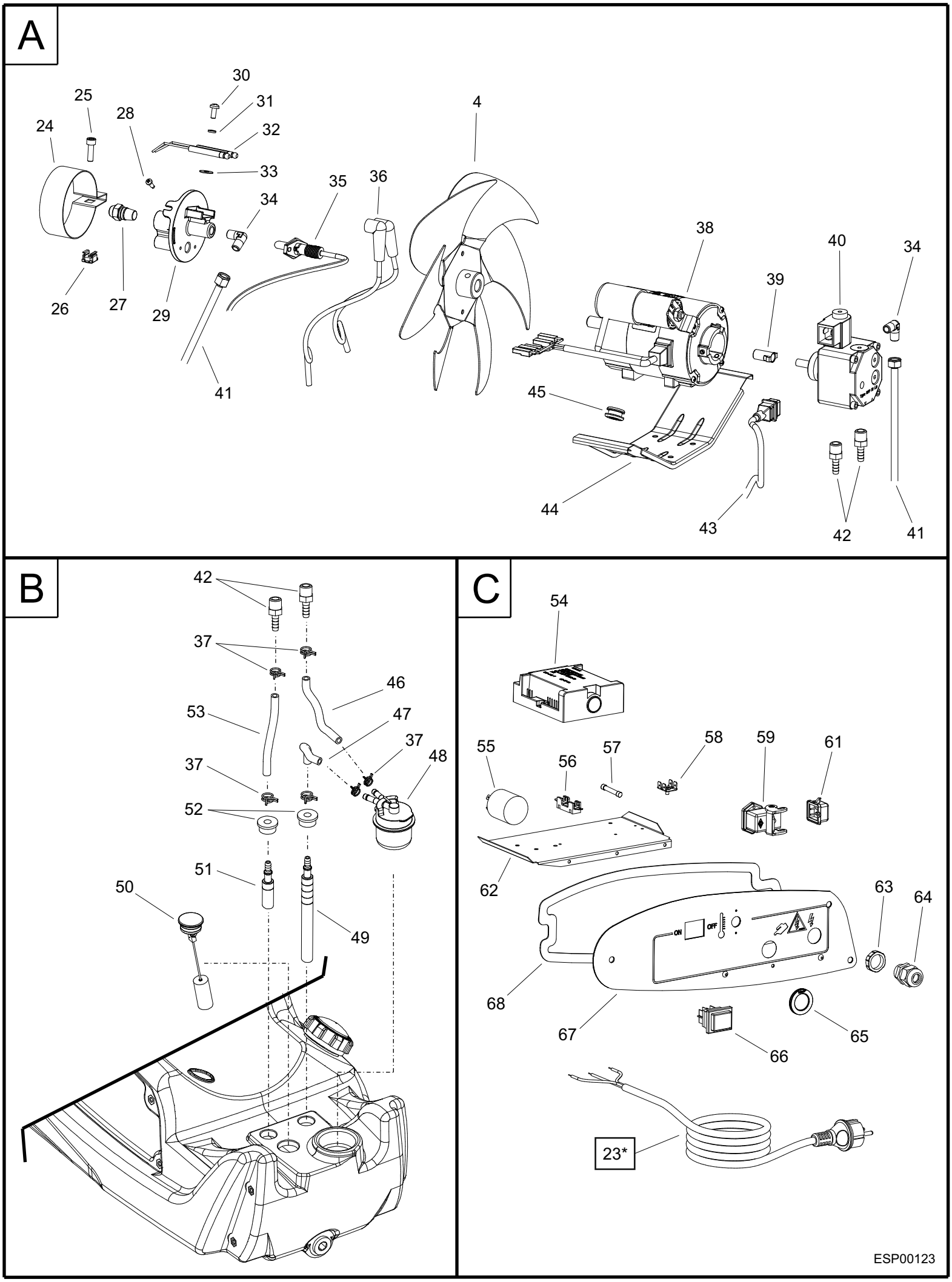
A
30
31
25
28
32
24
4
33
35
36
34
38
40
34
39
26
27
29
41
45
44
43
42
41
B
42
37
46
53
47
37
48
37
52
51
50
49
C
54
55
56
57
58
59
61
62
63
64
68
67
65
66
23*
ESP00123

Pos.	Code NR	Description
1	4160.646	CABLE PROTECTION
2	4033.016	UPPER SHELL
3	4033.028	AIR FLAP
4	4032.814	FAN
5	4032.836	INLET GRID
6	4140.665	SCREW
7	4160.272	WASHER
8	4032.811	HANDLE
9	4032.979	CAP
10	4032.813	DRAIN PLUG
11	4033.267	TANK
12	4032.809	AXLE
13	4032.094	WHEEL
14	4111.480	WHEEL CAP
15	4111.072	WHEEL HOLDER
16	4201.185	TANK FILTER
17	4032.846	TANK CAP
18	4104.170	CLIP NUT
19	4033.015	LOWER SHELL
20	4033.316	COMBUSTION CHAMBER
21	4032.883	LIMIT THERMOSTAT
23*	4033.253	POWER CORD SCHUKO
23-A	4033.252	POWER CORD NEW ZEALAND
23-B	4033.302	POWER CORD UK
24	4032.545	AIR REGULATION FLAP
25	4032.455	SCREW
26	4032.454	CAGE NUT
27	4100.809	NOZZLE
28	4161.956	SCREW
29	4033.042	BURNER FLANGE
30	4110.363	SCREW
31	4110.393	AUTOLOCK WASHER
32	4033.123	BIFILAR ELECTRODE
33	4110.394	FIBER WASHER
34	4033.198	ELBOW
35	4033.022	PHOTOCELL

Pos.	Code NR	Description
36	4032.885	HIGH TENSION CABLES
37	4100.810	PIPE CLAMP
38	4033.219	MOTOR
39	4111.081	COUPLING
40	4111.042	PUMP
41	4033.187	FLEXIBLE OIL PIPE
42	4032.906	FITTING
43	4032.342	SOLENOID SPOOL CORD
44	4032.835	MOTOR BRACKET
45	4032.947	CABLE PROTECTION
46	4033.269	OIL PIPE FILTER-PUMP
47	4033.268	OIL PIPE TANK-TANK FILTER
48	4260.107	FUEL FILTER
49	4110.355	OIL SUCTION LINE
50	4260.099	FUEL GAUGE
51	4033.038	OIL DISCHARGE LINE
52	4100.541	RUBBER BUSHING
53	4110.032	OIL DISCHARGE PIPE
54	4033.017	IGNITION CONTROL
55	4032.771	POWER LINE RFI FILTER
56	4033.301	FUSE HOLDER
57	4032.850	FUSE
58	4160.639	POP RIVET TERMINAL 4 WAY
59	4111.119	THERMOSTA SOCKET
61	4162.467	CAP FOR THERMOSTAT SOCKET
62	4033.292	ELECTRICAL COMPONENTS BASE
63	4100.656	NUT
64	4150.528	STRAIN RELIEF
65	4033.251	BOARD BUTTON CAP
66	4165.204	SWITCH
67	4033.272	ELECTRICAL PANEL
	4033.273	ADHESIVE
68	4033.274	PANEL GASKET

MODEL B 180 - 220-240 V / 50 Hz

UNIT 1

ILLUSTRATED PARTS BREAKDOWN

From Serial Number: 06837000522

Rev.F - Mar. 2017

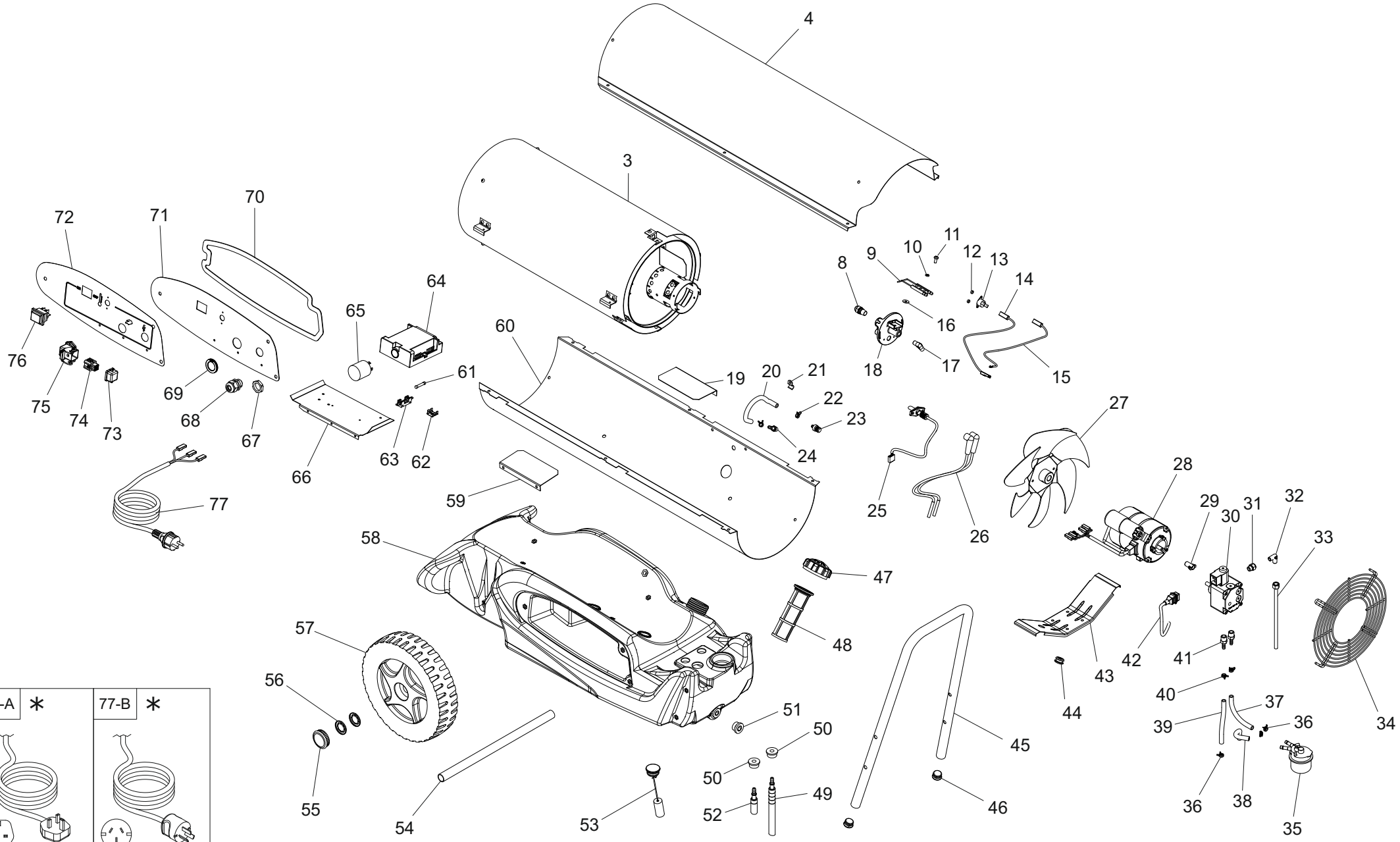

77-A *	77-B *
POWER CORD UK (type G)	POWER CORD New ZL (type I)

ESP00123

Pos.	Code NR	Description
3	4033.316	COMBUSTION CHAMBER
4	4033.016	UPPER SHELL
8	4100.809	NOZZLE
9	4033.123	BIFILAR ELECTRODE
10	4110.393	ELASTIC WASHER
11	4160.601	SCREW
12	4032.692	SPACER
13	4032.883	SAFETY THERMOSTAT
14	4111.087	THERMOSTAT WIRE
15	4032.946	THERMOSTAT WIRE
16	4110.394	FIBER WASHER
17	4033.198	90° CONNECTION
18	4033.042	COMBUSTION HEAD
19	4033.028	AIR FLAP
20	4110.032	RUBBER PIPE
21	4034.368	CLIP
22	4100.810	CLAMP
23	4260.246	BREATHE VALVE
24	4034.390	STRAIGHT CONNECTION
25	4032.776	PHOTOCELL
26	4032.885	HIGH TENSION WIRES
27	4032.814	FAN
28	4033.219	MOTOR
29	4111.081	MOTOR COUPLING
30	4111.042	FUEL PUMP
31	4161.501	STRAIGHT CONNECTION
32	4033.198	90° CONNECTION
33	4033.187	OIL PIPE
34	4032.836	GRILLE
35	4260.107	FUEL FILTER
36	4100.810	CLAMP
37	4033.269	RUBBER PIPE
38	4033.268	RUBBER PIPE
39	4110.032	RUBBER PIPE
40	4100.810	CLAMP
41	4032.906	STRAIGHT CONNECTION
42	4032.342	ELECTROVALVE WIRE
43	4032.835	MOTOR SUPPORT
44	4032.947	WIRE PROTECTION

Pos.	Code NR	Description
45	4032.811	HANDLE
46	4032.979	CAP
47	4032.704	TANK CAP
48	4201.185	TANK FILTER
49	4100.355	SUCTION PIPE
50	4100.541	RUBBER BUSH
51	4032.813	TANK DRAIN CAP
52	4033.038	DISCHARGE PIPE
53	4260.099	FUEL GAUGE
54	4032.809	WHEELS AXLE
55	4111.480	WHEELS CAP
56	4111.072	BLOCK WASHER
57	4032.094	WHEEL
58	4034.387	TANK
59	4033.028	AIR FLAP
60	4034.396	LOWER SHELL
61	4032.850	FUSE
62	4160.639	GROUND TERMINALS
63	4033.301	FUSE HOLDER
64	4033.017	PC-BOARD
65	4032.771	ELECTRICAL LINE FILTER
66	4033.292	COMPONENTS SUPPORT
67	4100.656	NUT
68	4150.528	STRAIN RELIEF
69	4033.251	PC-BOARD PROTECTION
70	4033.274	CONTROL PANEL GASKET
71	4033.272	CONTROL PANEL
72	4033.273	CONTROL PANEL LABEL
73	4162.467	THERMOSTAT CAP
74	4161.400	THERMOSTAT PLUG
75	4111.119	THERMOSTAT SOCKET
76	4165.204	SWITCH
77	4033.253	POWER CORD SCHUKO
77-A	4033.302	POWER CORD UK
77-B	4033.252	POWER CORD NEW-ZEALAND